Marzorati
Sistemi di Trasmissione

drive your motion

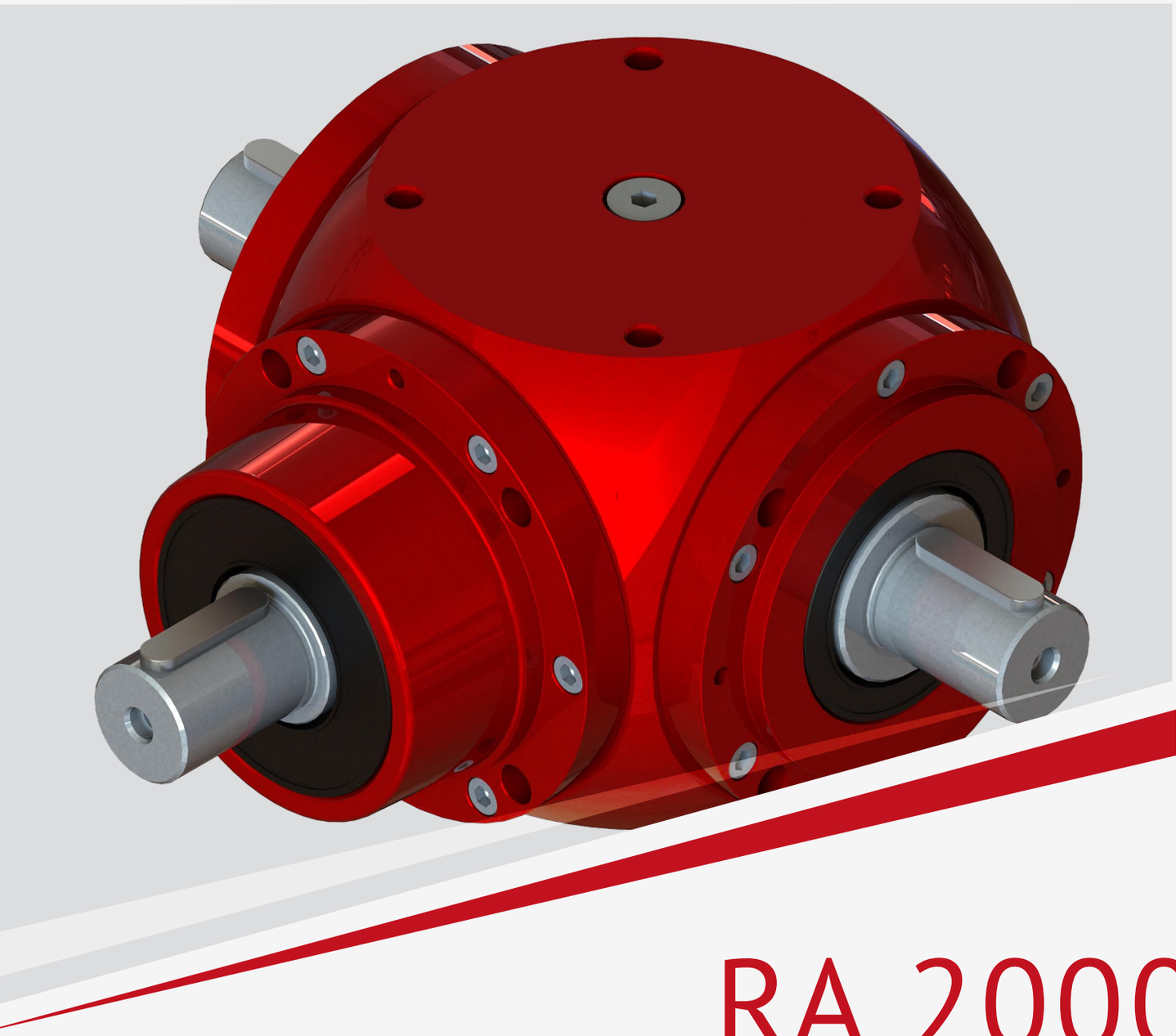

RA 2000

NRA SERIES BEVEL GEARBOXES

GENERAL CATALOGUE

www.marzorati.it

EN

Our Values

DRIVE YOUR MOTION, EVERYWHERE

Responsibility

We recognise responsibility towards our future and society.

We develop, manufacture and market products and solutions with high added value that adapt to the needs of our customers, within a constantly changing market. We encourage individual responsibility and team spirit. We strive to achieve outstanding performance, cooperation, and working in line with precise rules, efficiency and affordability.

Loyalty

We generate loyalty through human relationships based on mutual respect: we aim to forge relationships with our Customers, Partners and Associates that promote inventiveness and creativity so as to achieve successful partnerships.

We are proud of the dynamic approach we have instilled in our corporate culture.

For us, managing the company means leading by example, establishing the conditions and providing the opportunity for everyone to express their abilities to the fullest and to play their part in developing the company.

Innovation

Every day, we draw inspiration from our creativity and we pursue an ongoing quest for innovation:

We come up with brand new solutions and we create paths, so that today's vision becomes tomorrow's reality.

Through our knowledge, research and constant training we shape a philosophy that allows us and our partners to open up to new horizons.

The sharing of creative inputs gives rise to a future-oriented dynamic, geared to success.

Marzorati A Commercial Partner For Every Business

DRIVE YOUR MOTION, EVERYWHERE

GLASS

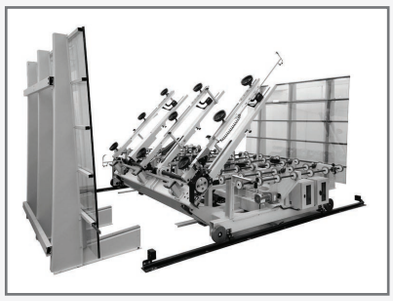

PAPER

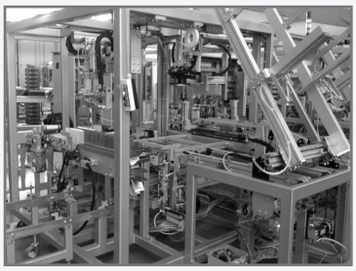

WOOD

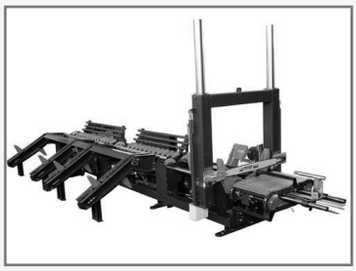

SOLAR ENERGY

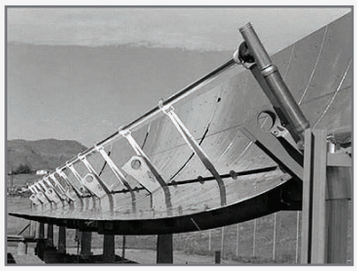

PACKAGING

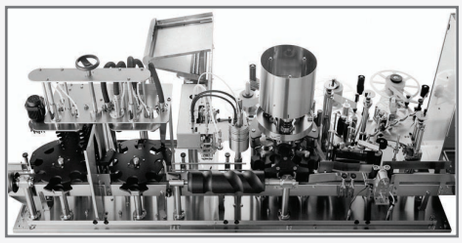

PHARMACEUTICAL

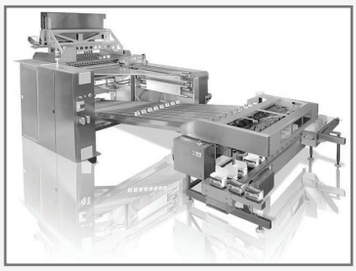

MARBLE

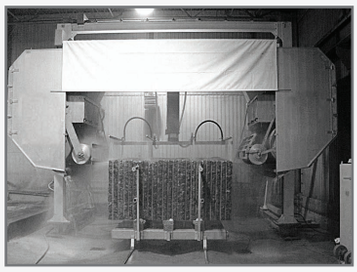

PLASTIC-RUBBER

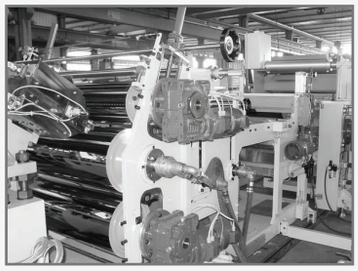

CABLE TRANSPORT

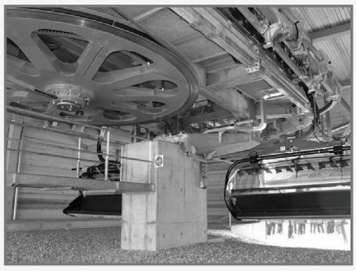

METALLURGY

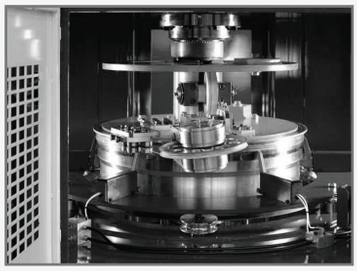

PRINT

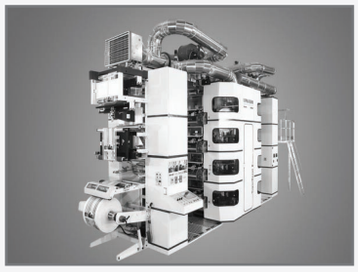

WIND ENERGY

SUMMARY

ORDER CODING identify the product selected by referring to the diagram below

Coding Example	RA2010	N	2	XYW	03	PAM	J	VT	OA	TL

SIZE
constructive size of the bevel gearbox
2005 – 2010 – 2020 – 2040 – 2080 – 2160 – 2320 – 2640

RANGE
Bevel gearbox type
N - P - D - C - V - X - H - K

RATIO speed reduction ratio
Defined as
i = n1/n2, ratio, having *n1* rpm of the input shaft and *n2* rpm of the output shaft.
0.5 - 0.67 - 1 - 1.5 - 2 - 3 - 4 - 5

SHAFTS bevel gearbox shaft positioning and construction
Standard protruding shafts: ***X – Y – Z – W***
Oversized protruding shafts: ***E – L***
Hollow shafts: ***A – B – C – D***
Grooved hollow shafts: ***M - R - S***

LAYOUT
internal arrangement of the gears and configuration of the transmission
01 - 02 - 03 - 04 - 05 - 06 - 07 - 08 - 09 - 10 - 11 - 12 - 13 - 14 - 15 - 16 - 17 - 18 - 19

MOTOR CONNECTION To be specified ONLY IF PRESENT.
Arrangement for motor connection with "PAM" flange
(see list of flanges on page 63)

POSITION Working position in which the gearbox is installed, different from the Standard working position with horizontal shafts (assigned if a particular working position is not specified)
G - S - J - R

OPTIONAL EXTRA
To be indicated ONLY IF PRESENT
Abbreviations for the various optional extras available see p. 66

OPTIONAL EXTRA
To be indicated ONLY IF PRESENT
Abbreviations for the various optional extras available see p. 66

OPTIONAL EXTRA
To be indicated ONLY IF PRESENT
Abbreviations for the various optional extras available see p. 66

SHAFT DEFINITION

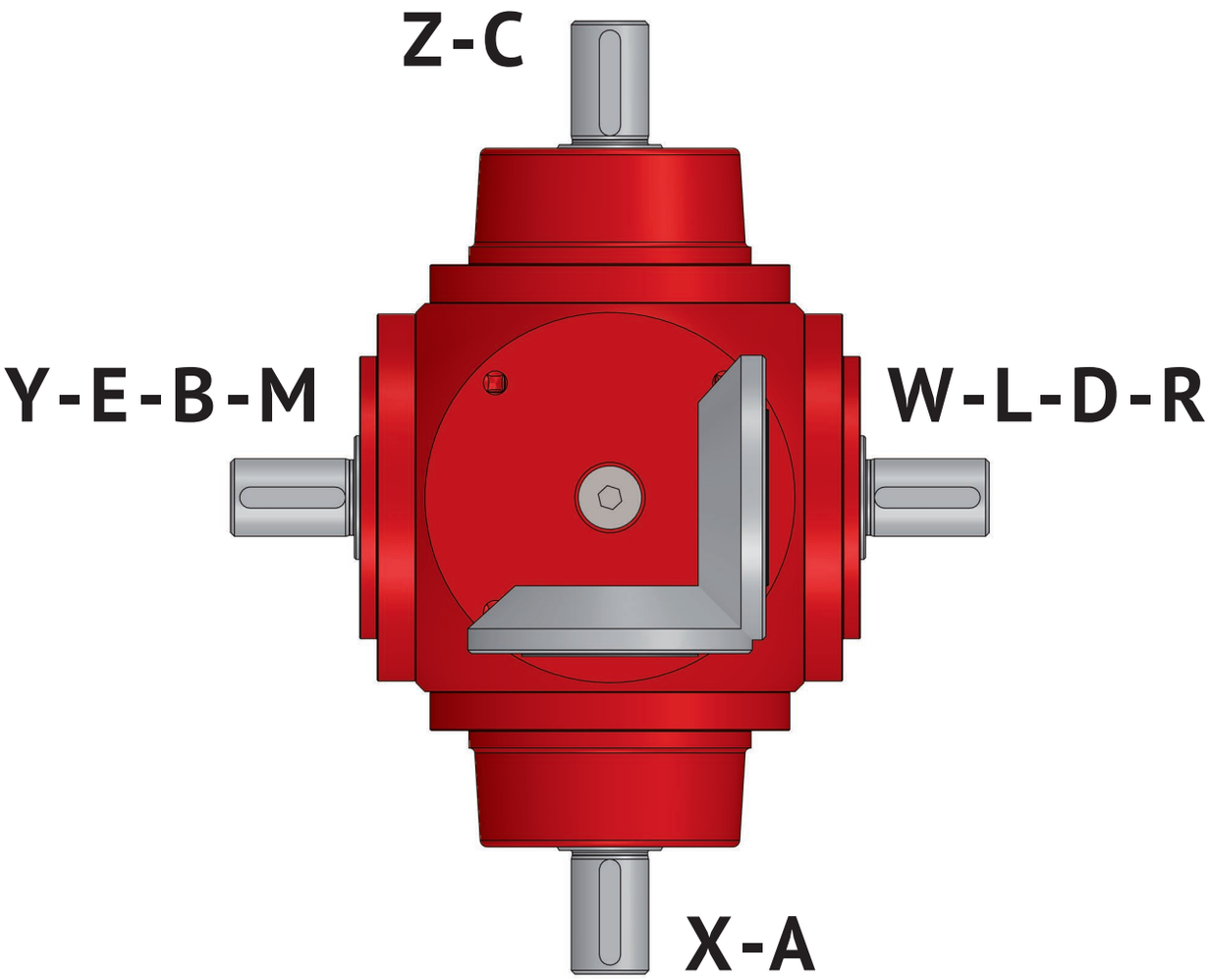

X - Z	STANDARD INPUT PROTRUDING SHAFTS
Y - W	STANDARD OUTPUT PRODTRUDING SHAFTS
E - L	OVERSIZED PROTRUDING SHAFTS (OUTPUT ONLY)
A - C	INPUT HOLLOW SHAFTS
M - R	OUTPUT GROOVED HOLLOW SHAFTS

WORKING POSITION

It is advisable to know the working position so as to achieve optimal lubrication of the internal parts. The following positions are intended with a horizontal ground (in black), where the force of gravity is always directed downwards.

STANDARD POSITION
Input axle and output axle of the gearbox belong to a plane parallel to the ground (it is not necessary to mention it when ordering)

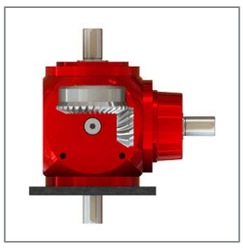

G POSITION
Input axle parallel to the ground, output axle perpendicular, wheel gear upwards

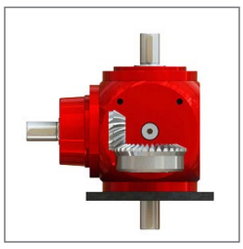

S POSITION
Input axle parallel to the ground, output axle perpendicular, wheel gear downwards

J POSITION
Input axle perpendicular to the ground, upwards, output axle parallel

R POSITION
Input axle perpendicular to the ground, downwards, output axle parallel

TECHNICAL FEATURES

8 Construction sizes:

2005 – 2010 – 2020 – 2040 – 2080 – 2160 – 2320 – 2640

8 Gear reduction ratios: :

- 6 speed reduction ratios
- 2 speed multiplication ratios

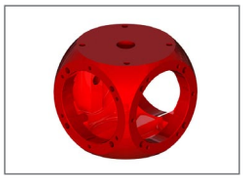

CASING
grey or ductile cast iron. (Other metals only available on request as a special optional extra).

GEARS
GLEASON bevel gears with spiral teeth, carburised quality AGMA Q11.

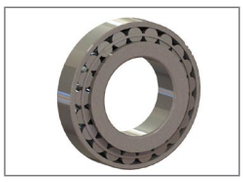

BEARINGS
radial with balls, radial with oblique contacts, with tapered rollers, with cylindrical rollers.

SHAFTS
tempered steel.
(Stainless steel available on request)

SEALS
NBR nitrile rubber compound. Available as optional seals with FPM-Viton fluorinated rubber compound or with SIL silicone rubber compound.

LUBRICATION
synthetic oil viscosity 40°C 141 mm/s, synthetic oil viscosity 40°C 220 mm/s, H1 approved food-grade oil. Other lubricants for special applications on request.

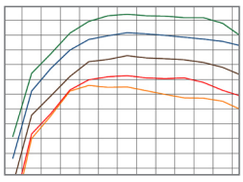

EFFICIENCY
variable depending on the product and the design parameters in the range [91% - 99%].

CHOOSING THE GEARBOX

Method for choosing the right product - Recommended initial assessments

The following catalogue is intended to help the customer create the code in order to select the correct product. Below is a brief method to make an initial product selection according to your needs.

We recommend assessing all possible aspects of your design. Feel free to contact our technical department if you have any issues.

The code of our products consists of:
SIZE - RANGE - RATIO - SHAFTS - ARRANGEMENT - MOTOR MOUNT - POSITION

• How to select the SIZE and RATIO
The choice of size and ratio are influenced greatly by the design parameters. As an initial assessment, we can begin the selection by finding out data such as Torque (Nm) and Power (kW) that the input and output shafts will have to transmit. It is also advisable to know the desired rotation speeds for each shaft, since the choice of the ratio is often determined by this parameter. Starting from these data, we can use transmissible torque curve graphs to determine the size and ratio of our bevel gearbox. The curves are calculated on a standard duration of 15000 hours, for this reason it would also be useful to know the work cycle for the gearbox, in order to estimate whether your application is more stressful than standard conditions, or not. In this regard, it would be advisable to also consider the Service Factors of the load such as **the Starting Factor, the Load Factor and the Duration Factor.**

SERVICE FACTORS

STARTING FACTOR "FA"			
TYPE OF LOAD	NUMBER OF HOURLY START-UP		
	1-10	11-30	31-60
UNIFORM LOAD	1	1.25	1.5
LOAD WITH MODERATE SHOCKS	1	1.5	1.75
LOAD WITH STRONG SHOCKS	1	1.75	2.25

LOAD FACTOR "FC"			
TYPE OF DRIVE MOTOR	UNIFORM LOAD	LOAD WITH MODE-RATE SHOCKS	LOAD WITH STRONG SHOCKS
UNIFORM MOTOR	1	1.25	1.5
MOTOR WITH MODERATE VIBRATIONS	1	1.5	1.75
MOTOR WITH STRONG VIBRATIONS	1	1.75	2.25

DURATION FACTOR "FD"										
DURATION IN HOURS	INPUT SPEED (rpm)									
	10	50	100	500	750	1000	1500	2000	2500	3000
1000	0.75	0.75	0.75	0.75	0.8	0.8	0.8	0.8	0.9	0.9
5000	0.8	0.8	0.85	0.9	0.9	0.9	0.95	1	1	1
10000	0.9	0.9	0.95	0.95	0.95	1	1	1	1	1.5
15000	0.95	0.95	1	1	1	1	1	1.5	1.5	1.5

CHOOSING THE GEARBOX

The torque curves can be determined from the table and, once determined, it is necessary to multiply them by the Application factors in order to size the system safely. It is also advisable to check the presence of radial loads and evaluate possibly using the high performance series or a range with oversized shafts. We remind you to check the compatibility with your application of the overall dimensions referring to the size selected by looking at the dimension tables in the catalogue (all measurements are expressed in mm).

Finally, we remind you that this calculation is only an estimate for an initial approximation, we therefore recommend using methods and rules of good practice. Contact our technical department if you have any difficulties.

• How to select the RANGE
Which range to opt for mainly depends on the customer's needs. The range is indicated in the code **with reference to the output shaft**, with the exception of the "C" range. Depending on the design conditions, a range with protruding shaft "N" will be more convenient, rather than a range with hollow shafts "C", or a range with oversized shafts "P", or a range with speed multiplication ratio "V". The "X" range is available if it is necessary to transmit motion in 3 orthogonal directions, while the "H" range is recommended in case of need to disengage/reverse the motion of an axle. The various ranges have different dimensions so it is advisable to consult the dimension tables.

• How to select SHAFTS and ARRANGEMENTS
The choice of shafts is influenced by the type of coupling required and the direction in which motion is to be transmitted. A protruding shaft must be coupled with a hub by means of the appropriate key. On the other hand, a hollow shaft can be connected by inserting a shaft inside it. It is possible to couple a protruding shaft to another protruding shaft through a joint or an extension (available as an optional extra). The choice of the arrangement determines the direction of rotation of the chosen shafts. We recommend that you consult the diagrams of the internal arrangements present in the dimension tables of each range.

• How to select the working POSITION
Select the position where the bevel gearbox is installed by following the figures on the previous pages. In the event that this position is not mentioned in the order, the standard position will be assigned. For the X range, the position is indicated in the interior layout diagram. We recommend that you contact the technical department if you want a particular working position other than those shown.

• How to select the MOTOR CONNECTION ARRANGEMENT
If you want to connect a motor directly to the gearbox, it is possible to request the Motor Connection Arrangement (adding the wording "PAM" to the code) to connect this motor through a special flange. The list of flanges available for PAM arrangement is present in the dimension tables on page 60. If you do not have your own motor, you can request one from us by specifying it when ordering. If you do not know which motor is suitable for your application, we recommend that you contact our technical department for correct sizing.

• OPTIONAL EXTRA
At the end of the code, indicate the abbreviation of the desired optional extras. Go to page 62 to see all the optional extras available for NRA gearboxes.

HOW TO CREATE THE CODE

Once the product has been selected, it can be ordered by creating the code following the abbreviations indicated at the beginning of the catalogue.

CODING EXAMPLE

RA2010 - N - 2 - XYW - 03 - J - VT - OA

In this case you are ordering:

- NRA size "2010"
- "N" range with protruding shafts
- With 2:1 speed reduction ratio
- Input shaft "X" and protruding output shafts "Y" and "W" on both sides
- With arrangement 03, having the directions of rotation as in the corresponding image in the catalogue (see dimension tables for the range)
- With working position "J" having input shaft perpendicular to the ground upwards (see "working positions" on page 11)
- With optional extra (see page 66) "VT" (Viton seals)
- With optional extra "OA" (food-grade oil)

PERFORMANCE DATA

TORQUE CURVES

The torque limits are calculated to guarantee gearbox operation of 15000 hours, considering the gearbox in continuous operation, in steady state and with good lubrication and maintenance, with oil charge referred to the selected working position and ambient temperature. The torque curves are obtained according to the speed reduction ratio expressed as ratio i in the formula below:

$$\text{reduction ratio } i = \frac{n1}{n2}$$

where n1 is the speed in revolutions per minute of the input shaft while n2 is the speed in revolutions per minute of the output shaft.

The Cartesian graphs below therefore refer to the maximum torque limit of the output shaft (TORQUE) for a given speed of the input shaft (SPEED).

TORQUE CURVE - RA2005

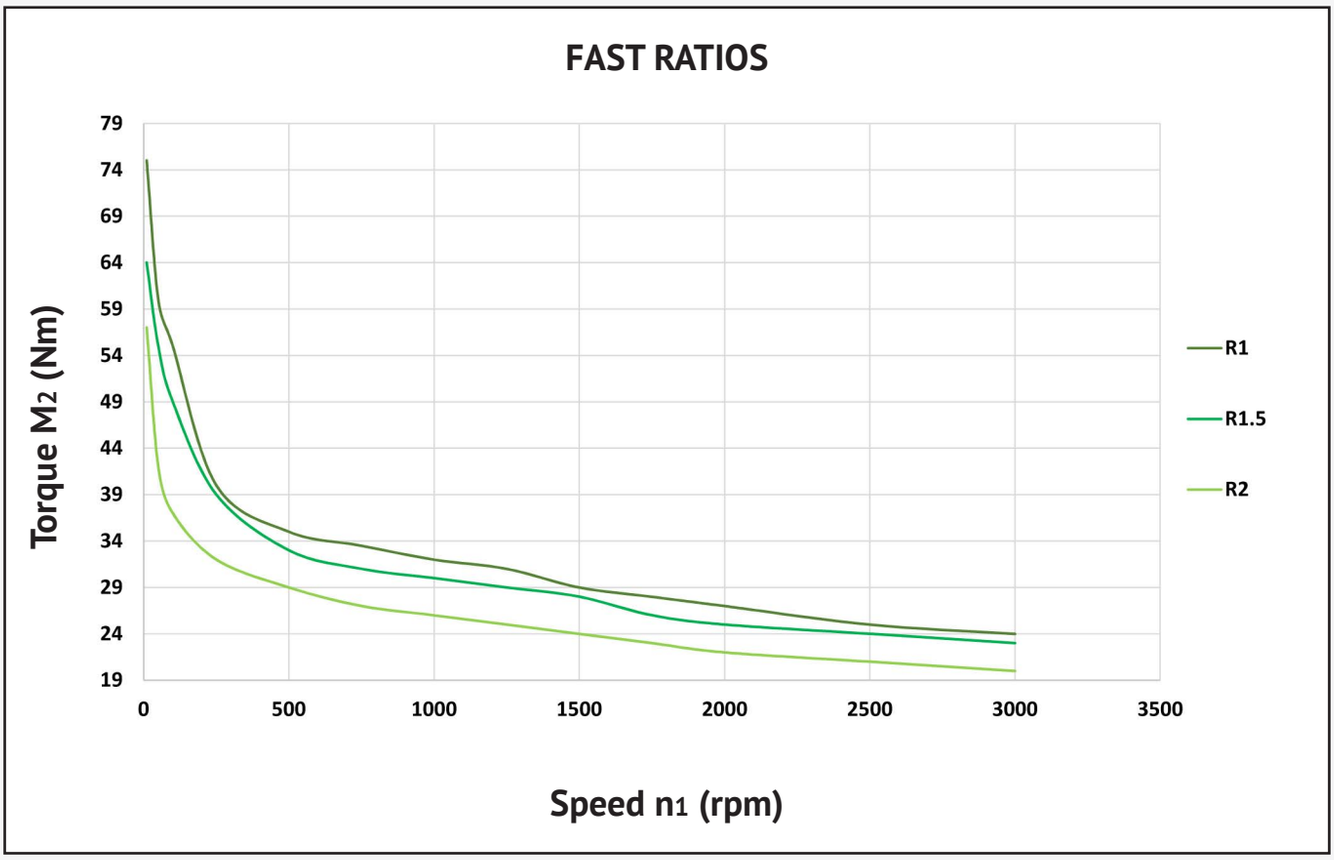

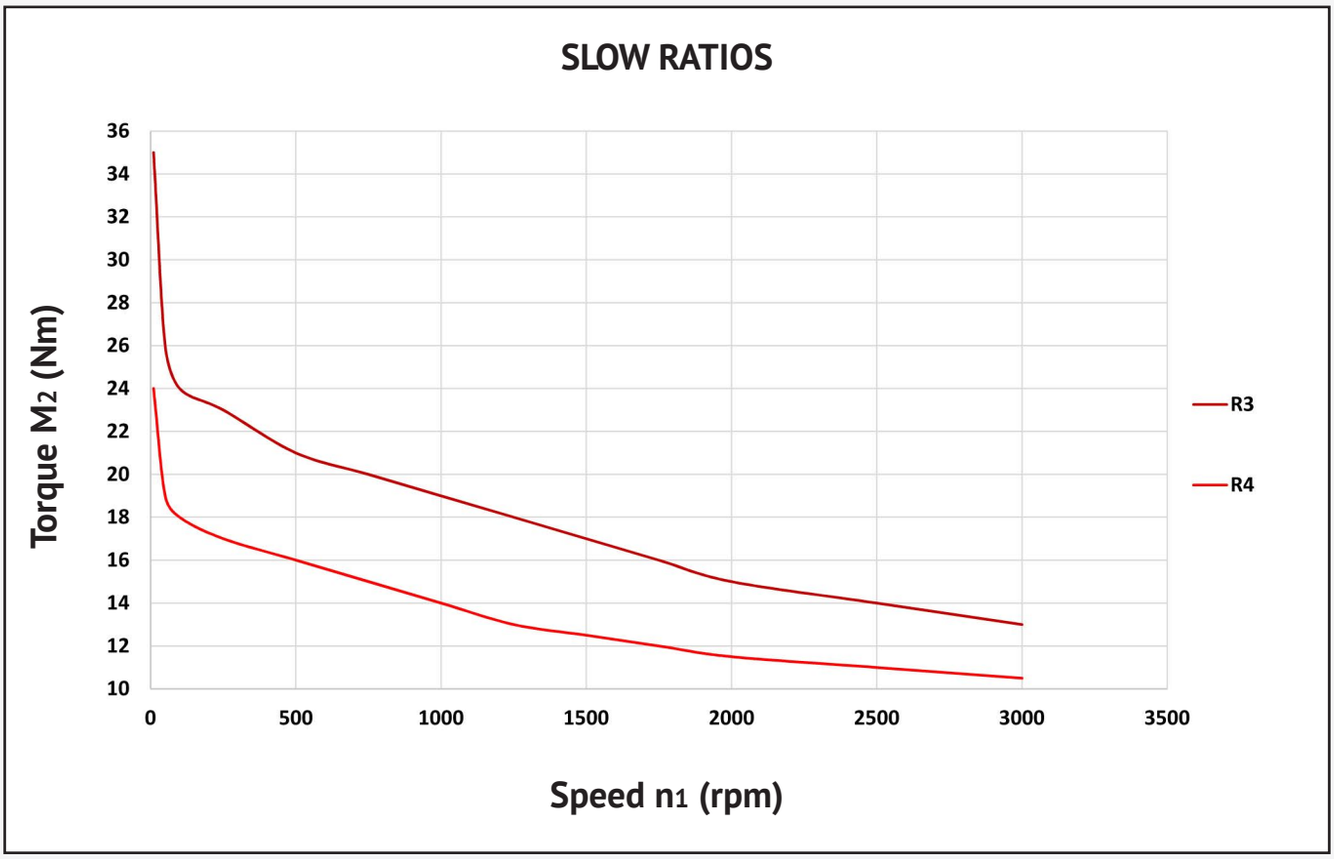

TORQUE CURVE - RA2005

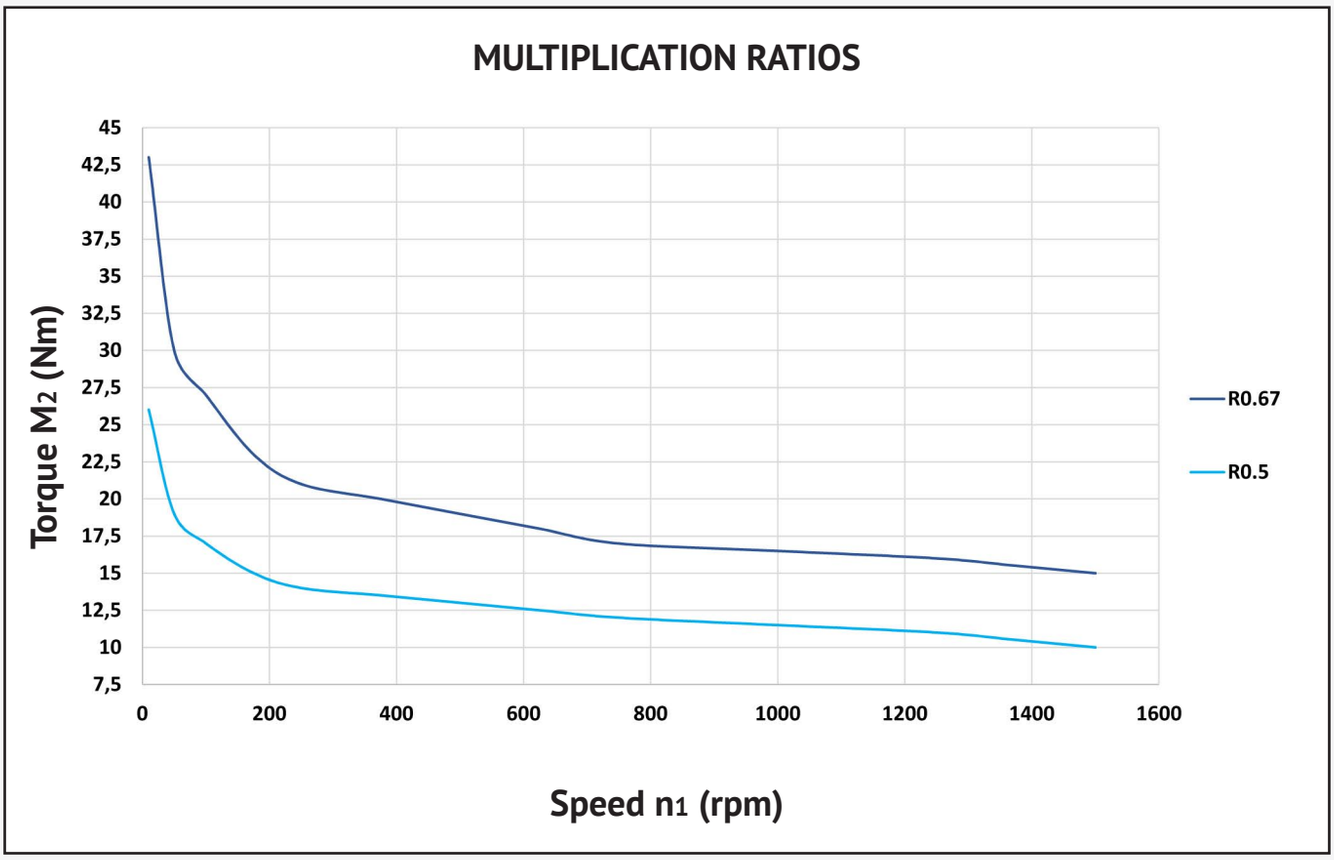

TORQUE CURVE - RA2010

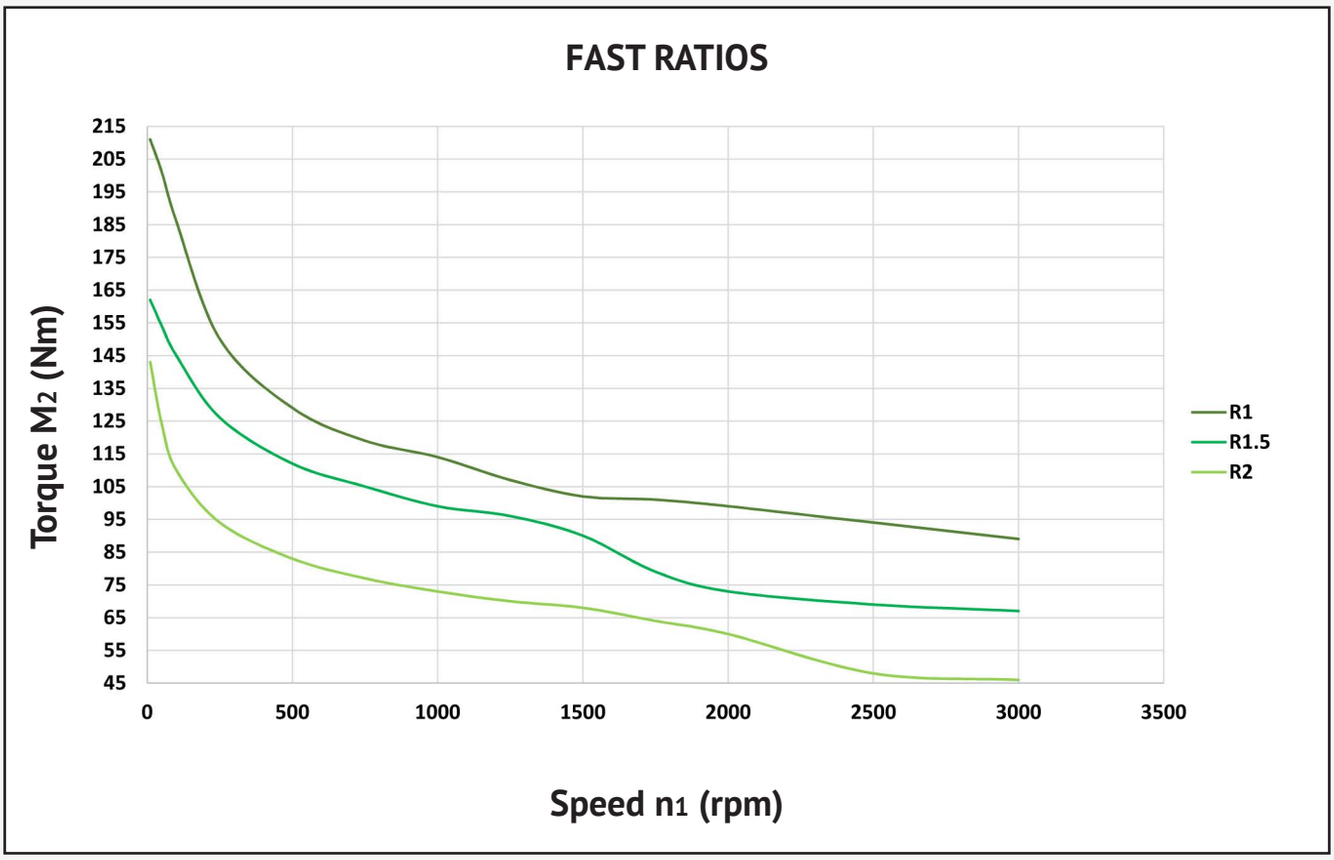

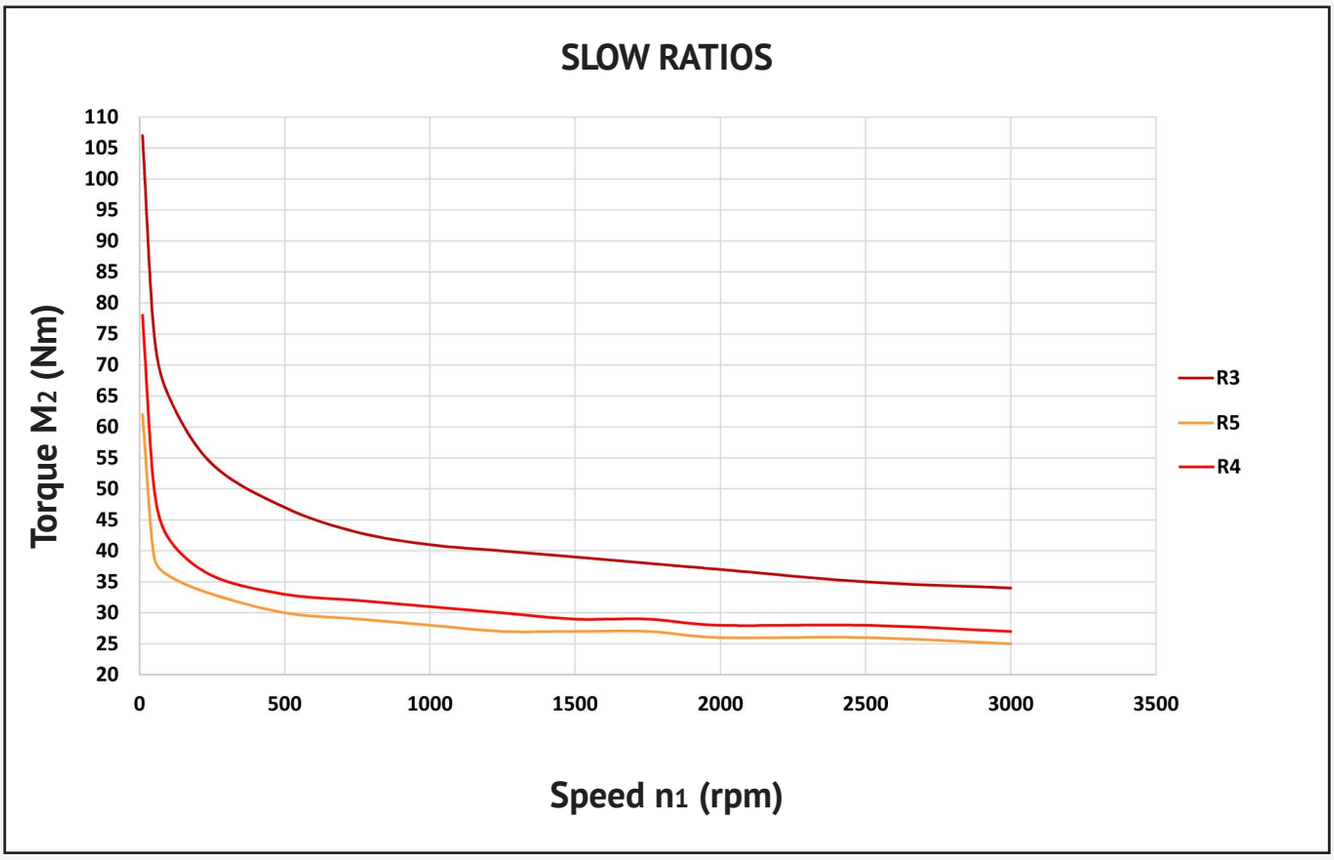

TORQUE CURVE - RA2010

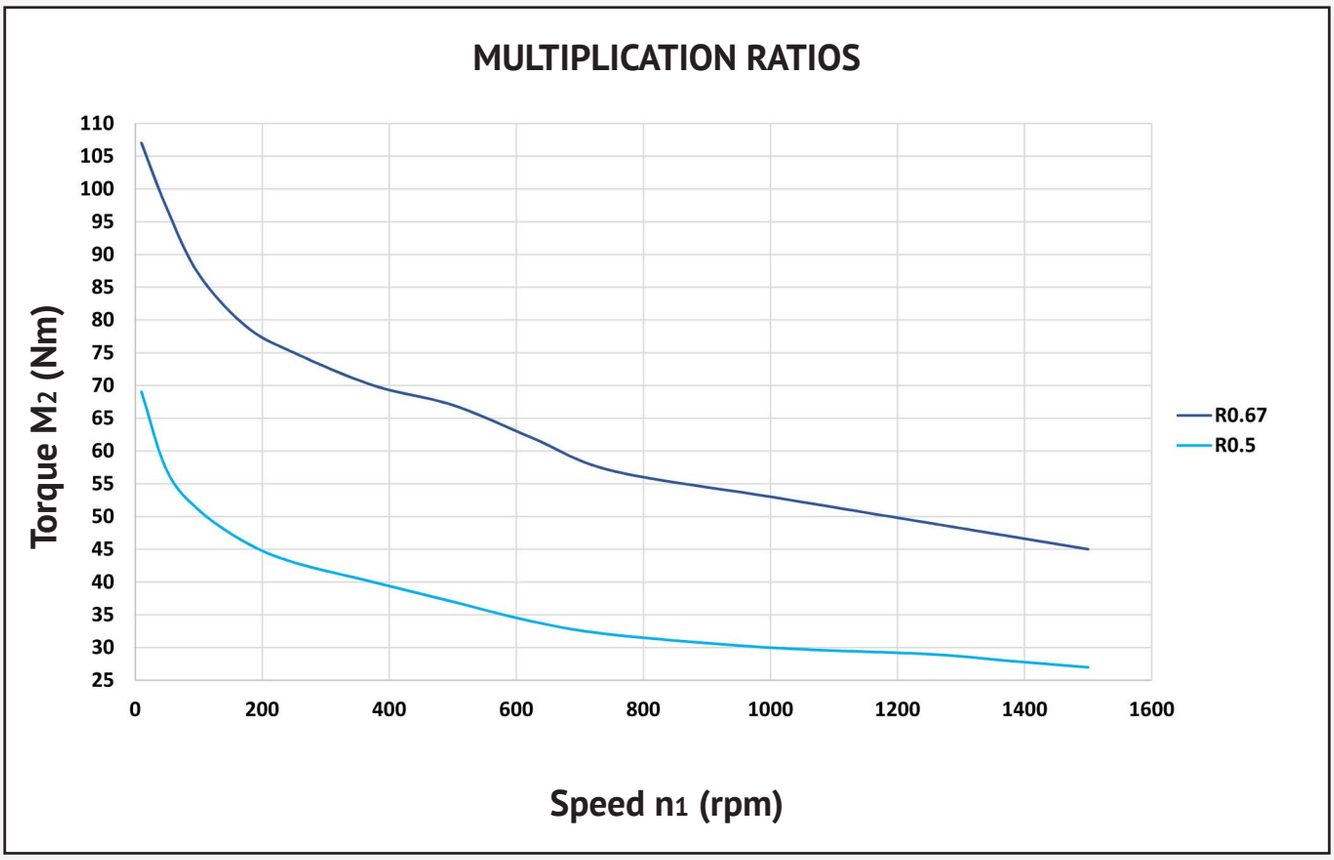

TORQUE CURVE - RA2020

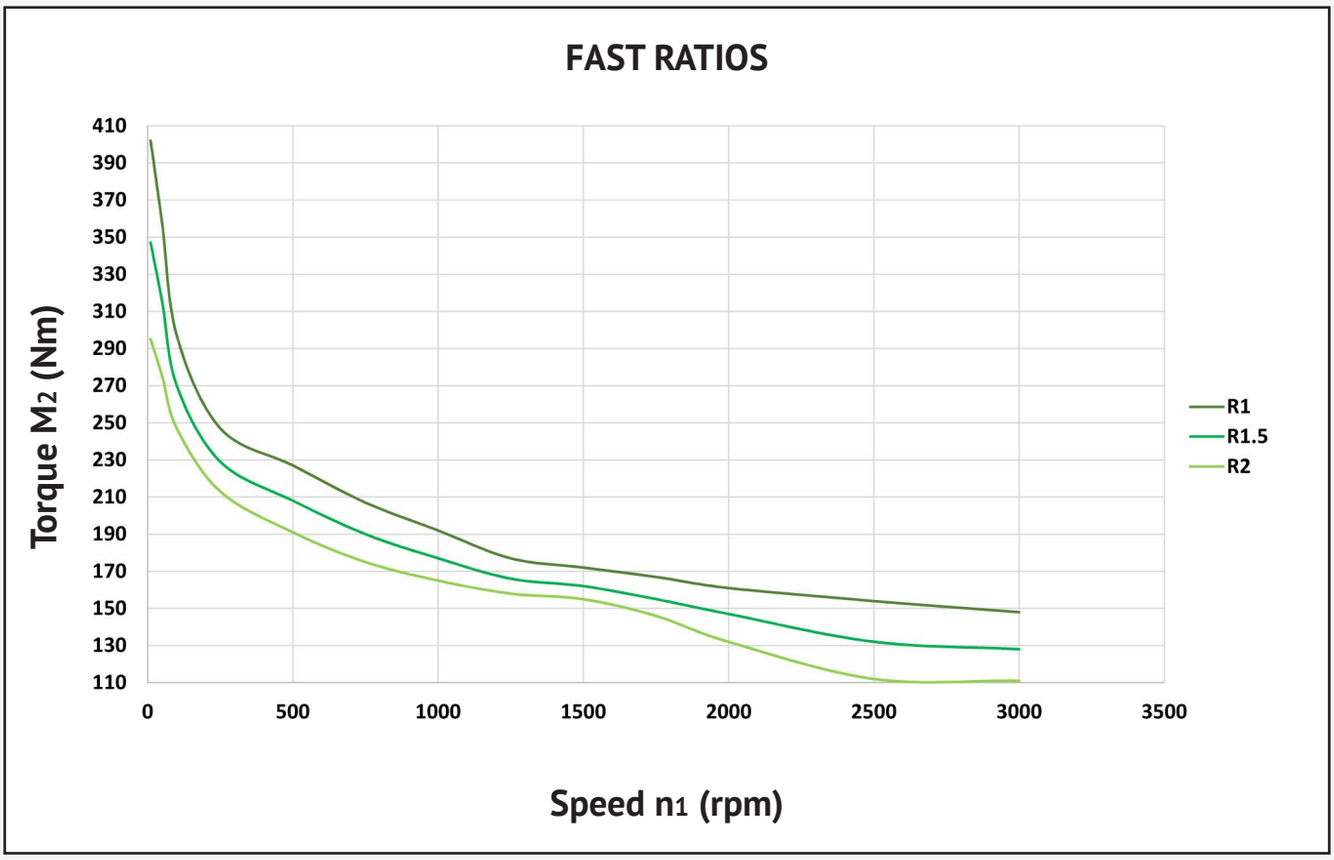

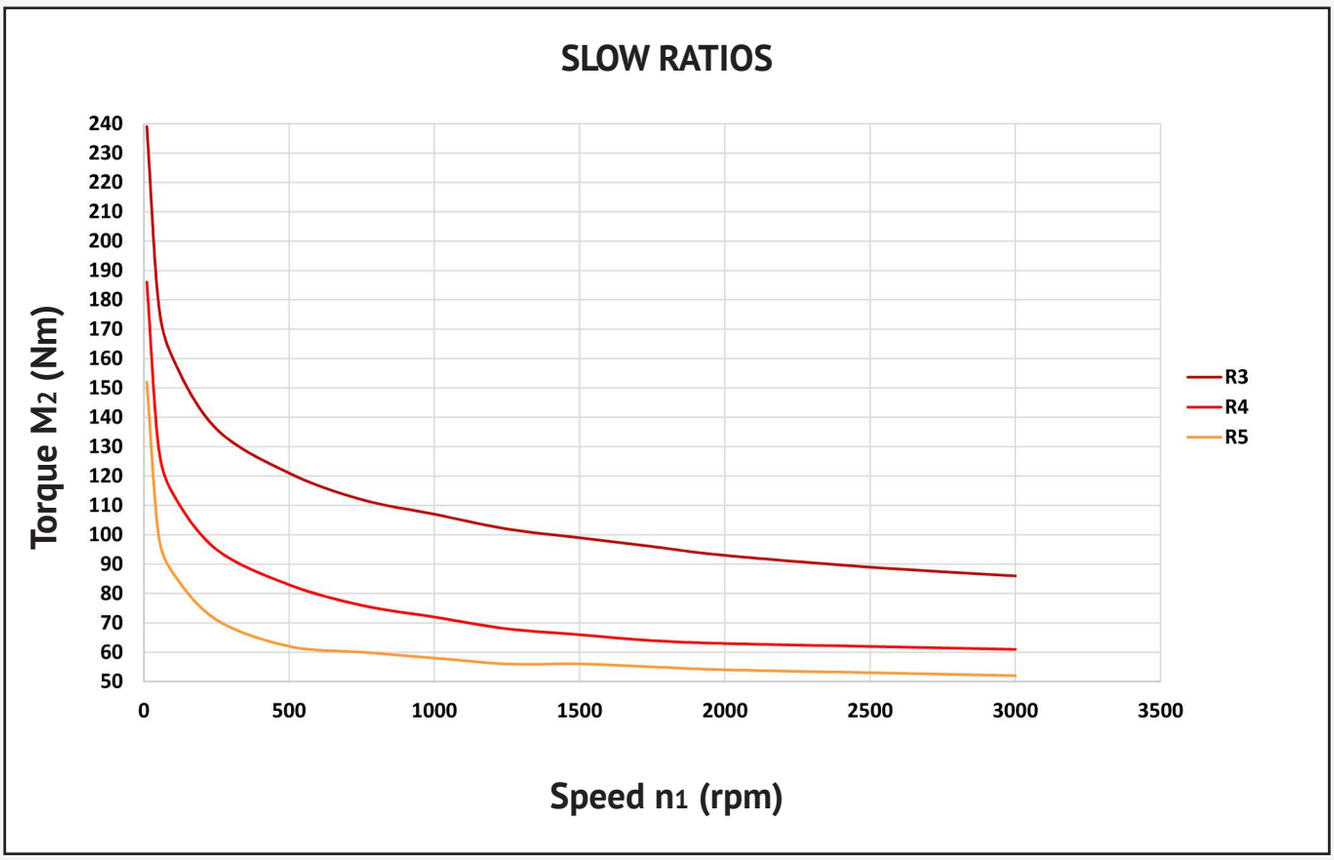

TORQUE CURVE - RA2020

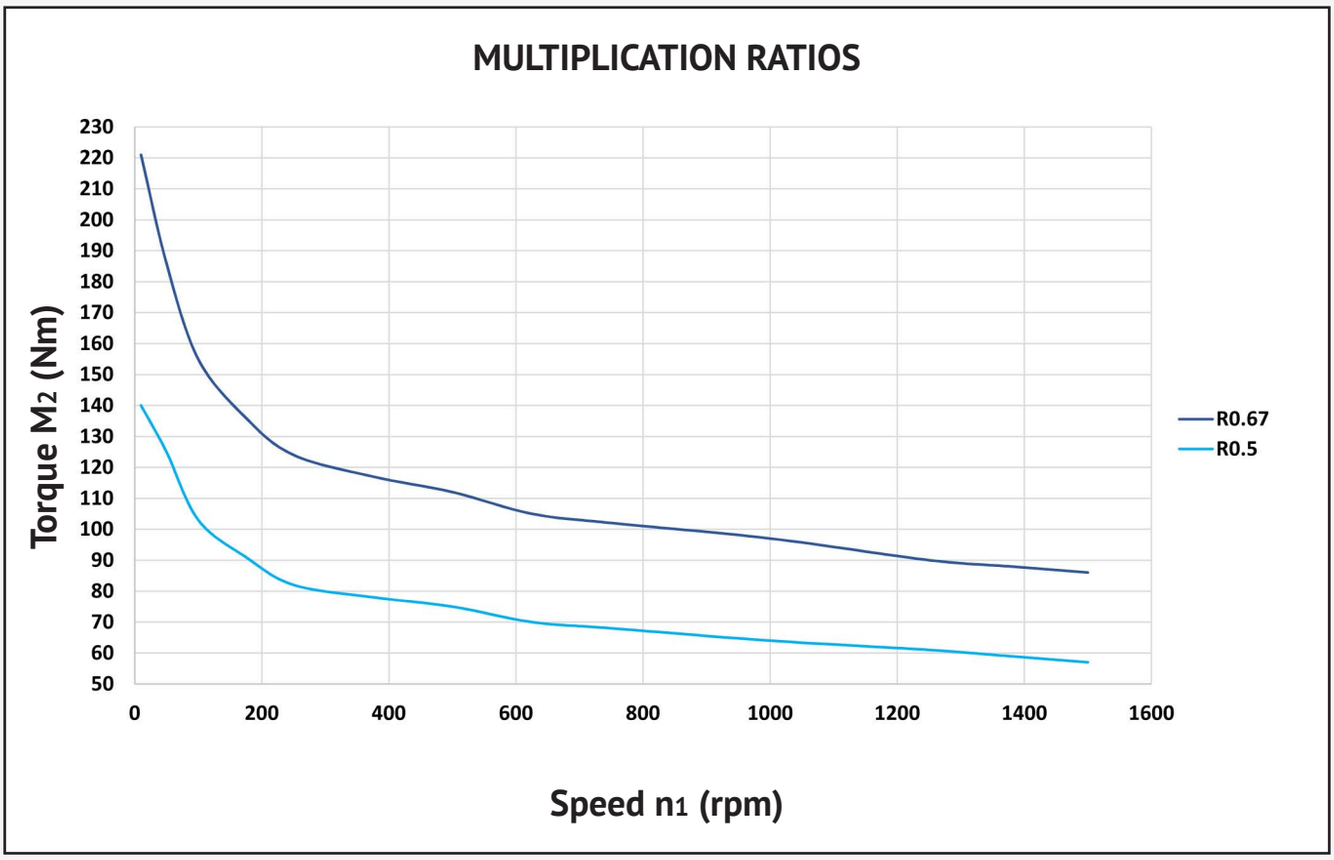

TORQUE CURVE - RA2040

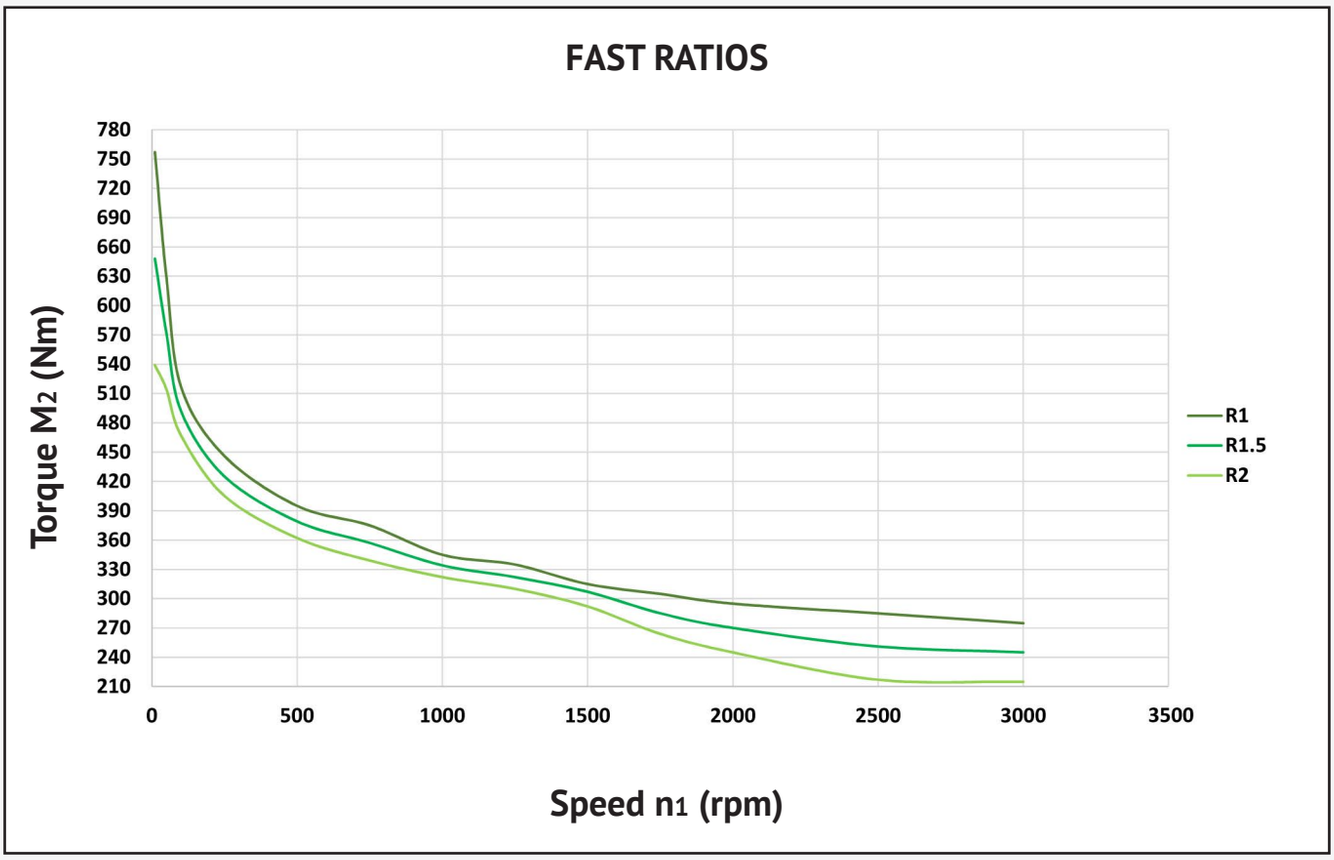

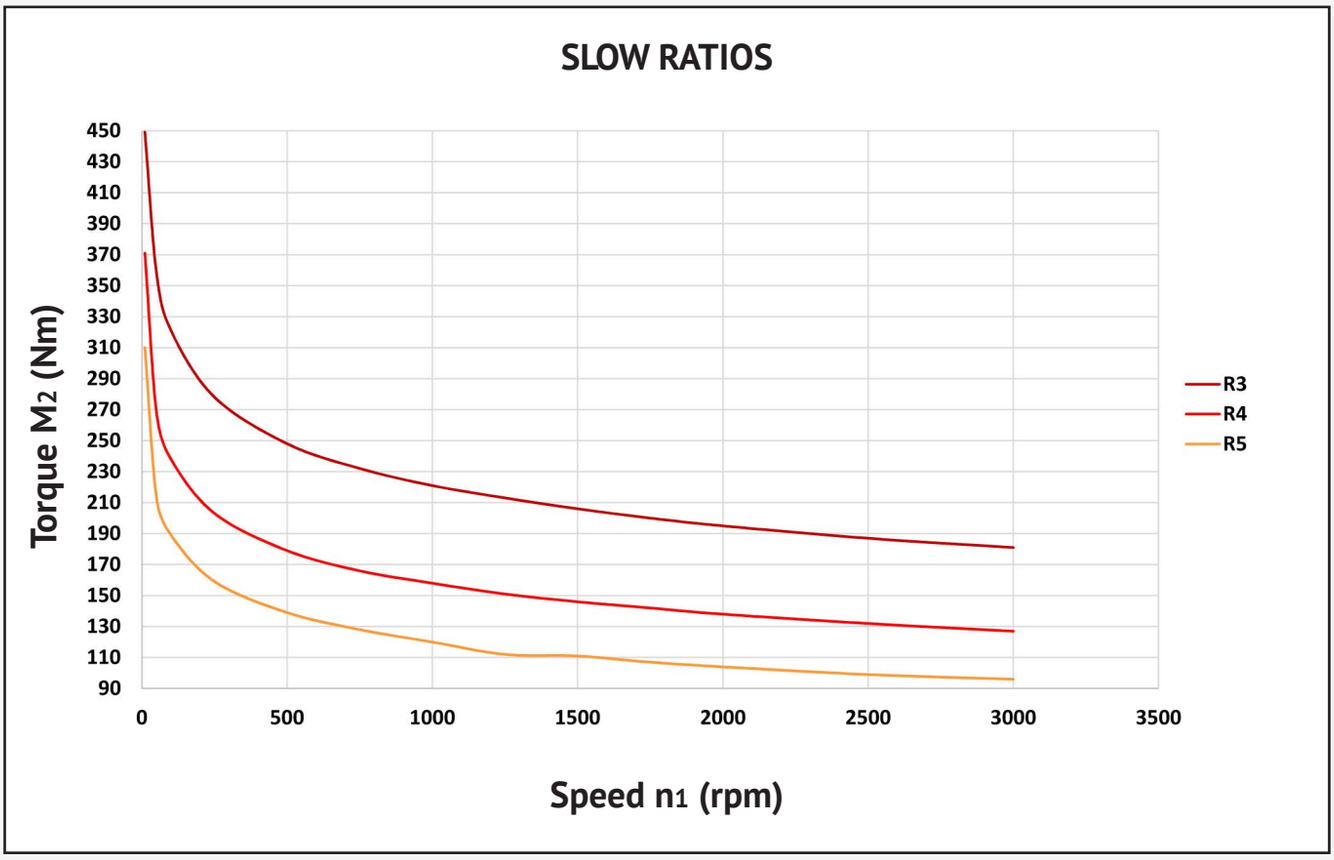

TORQUE CURVE - RA2040

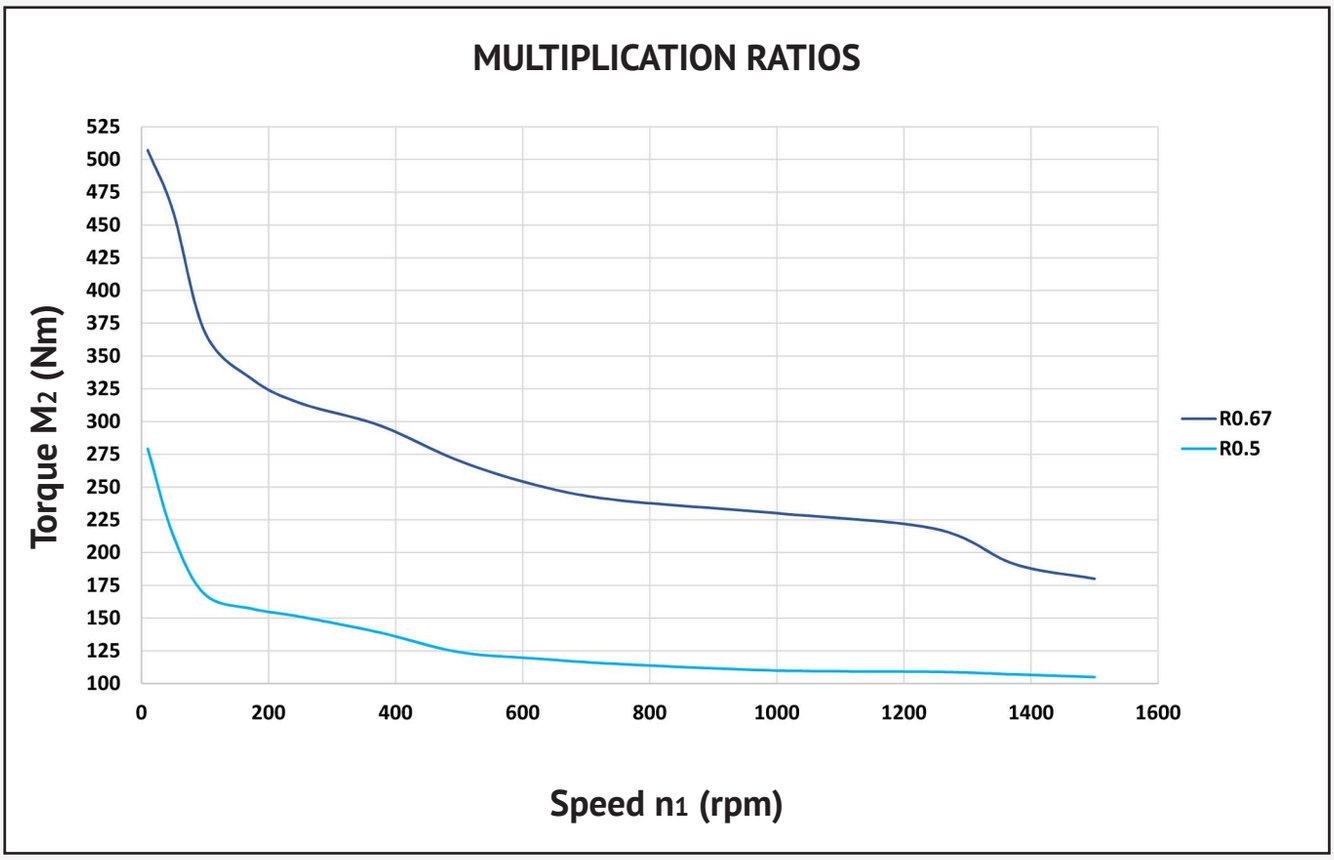

TORQUE CURVE - RA2080

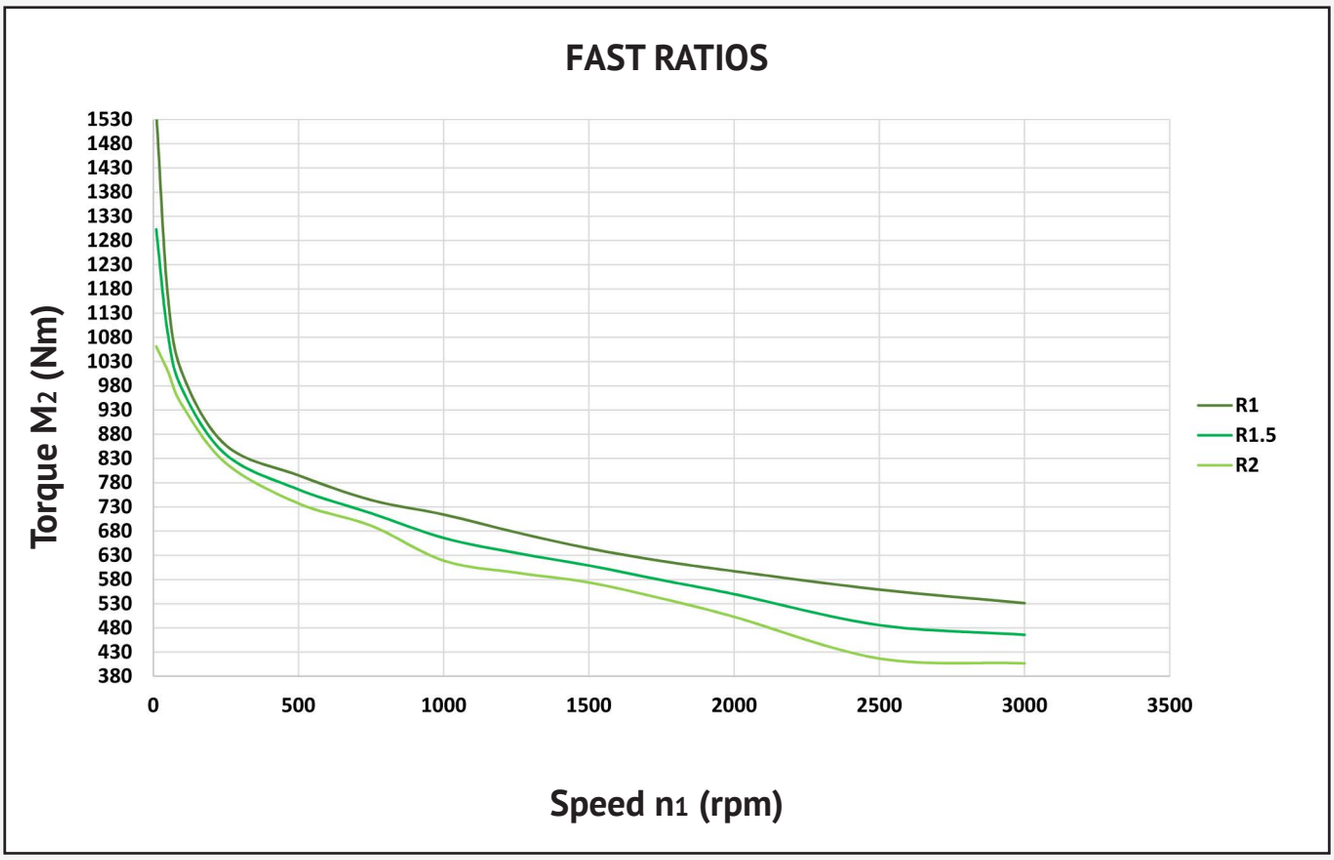

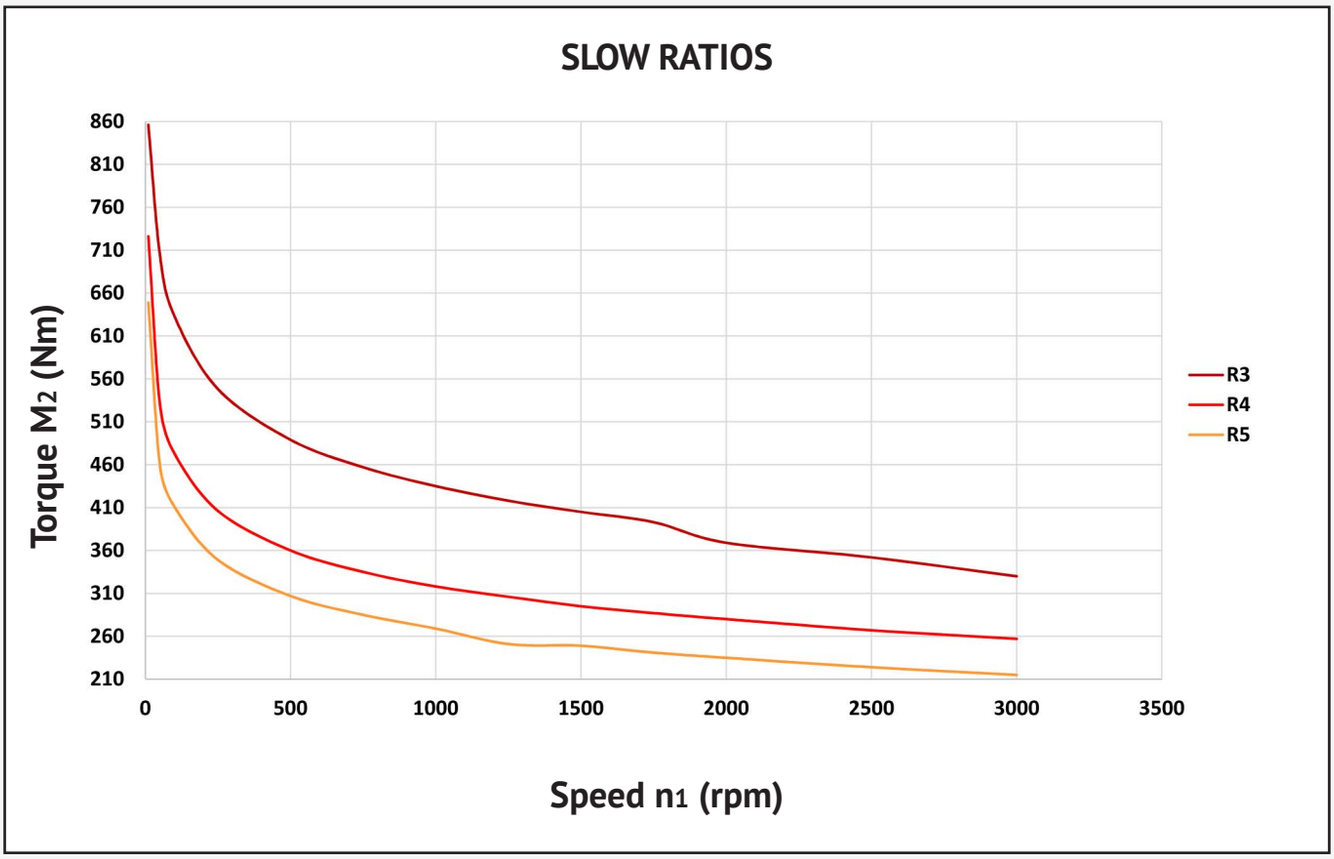

TORQUE CURVE - RA2080

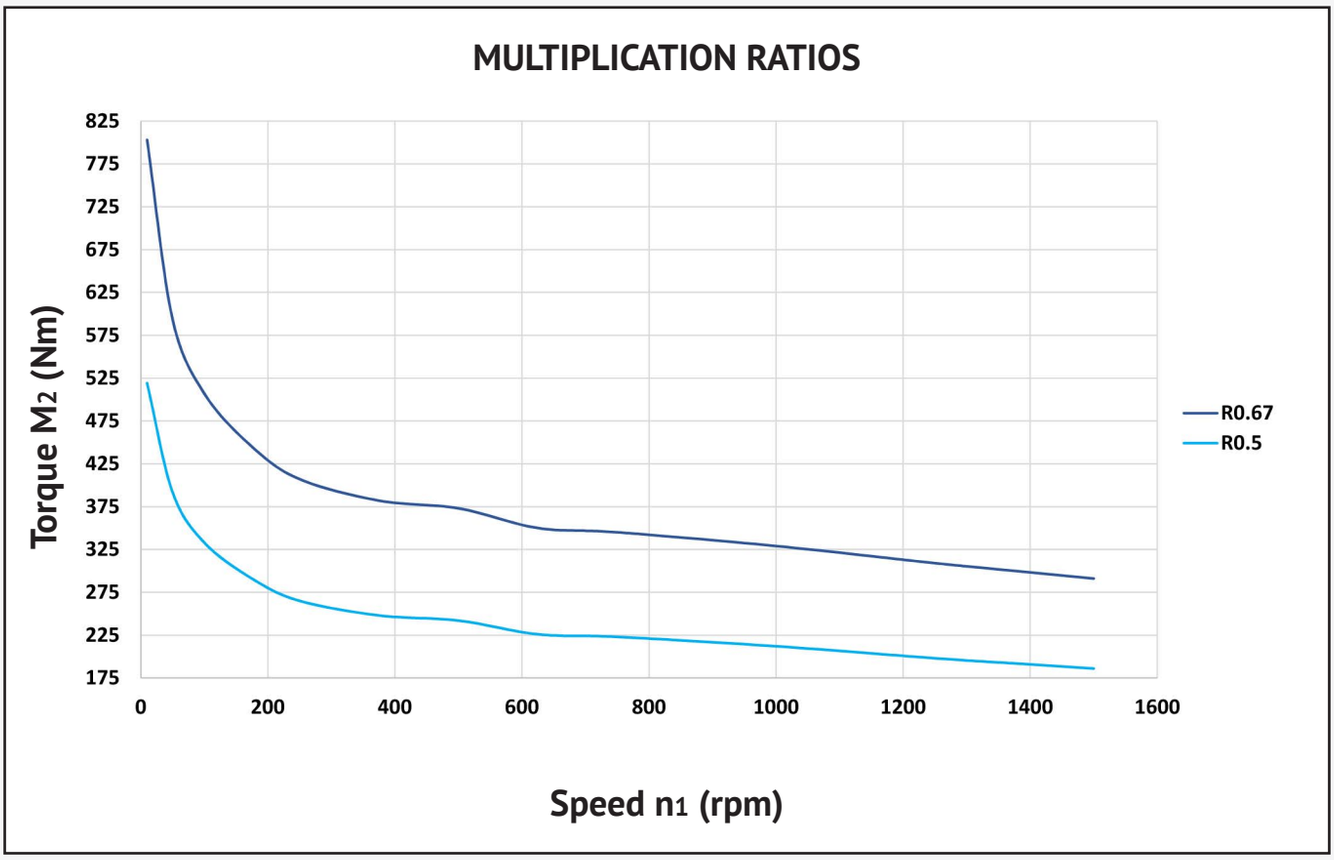

TORQUE CURVE - RA2160

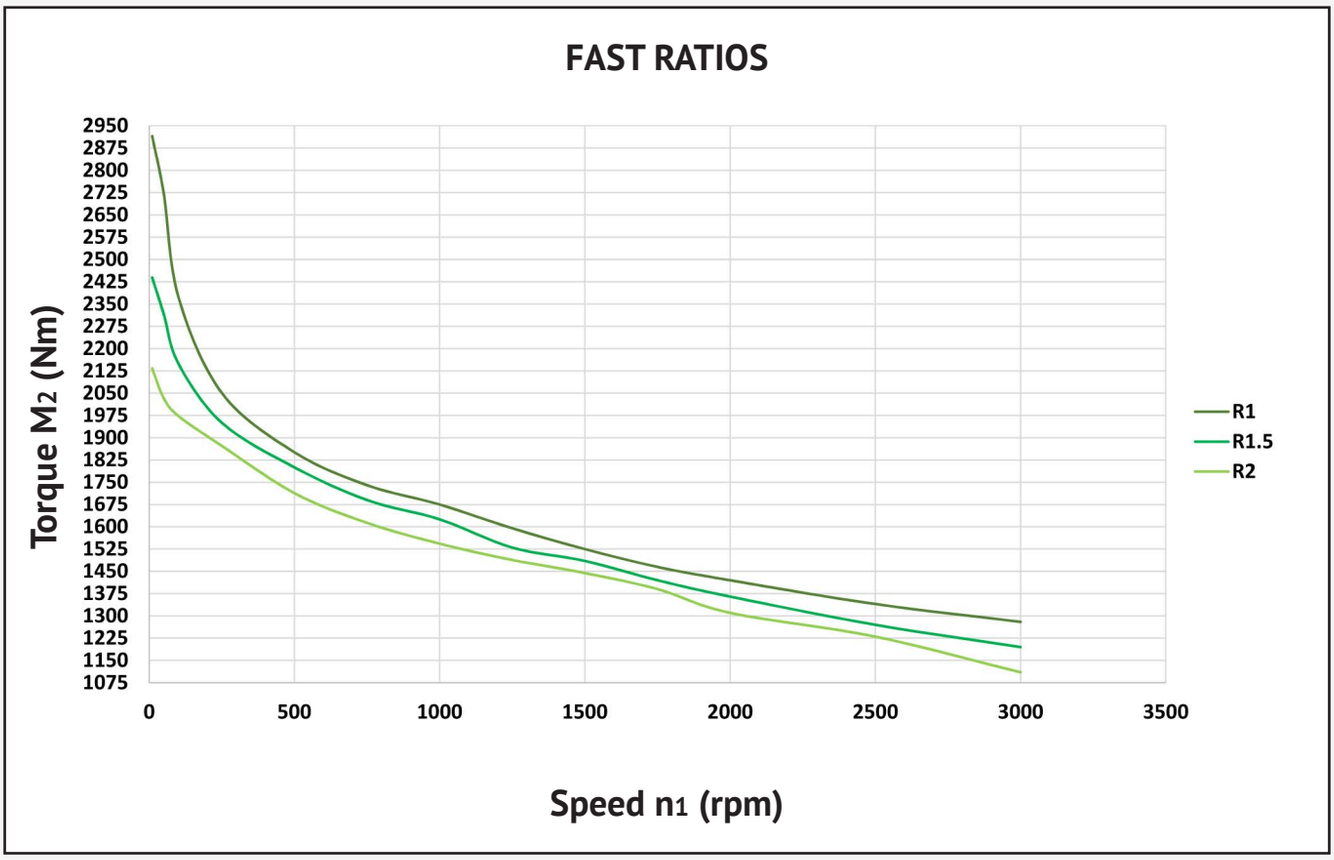

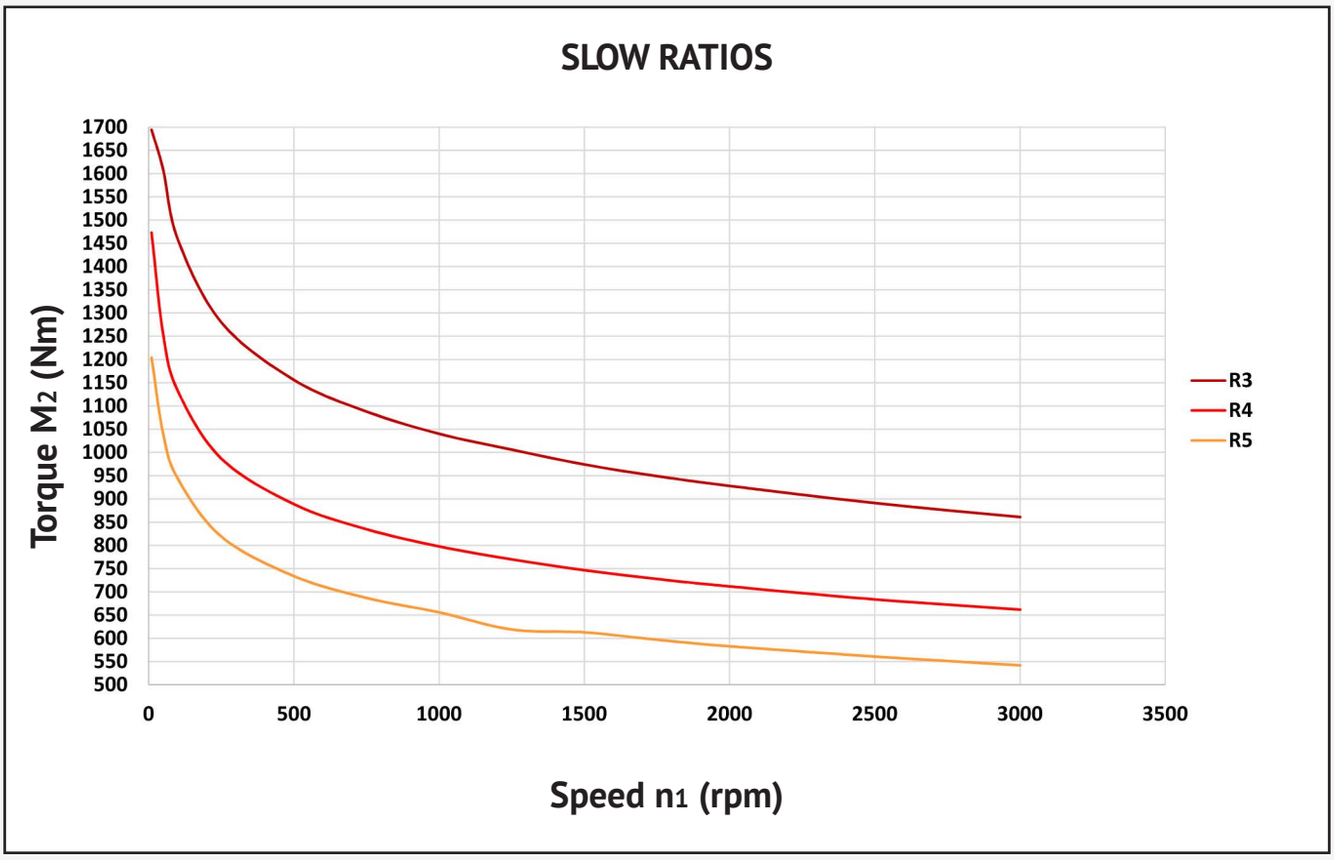

TORQUE CURVE - RA2160

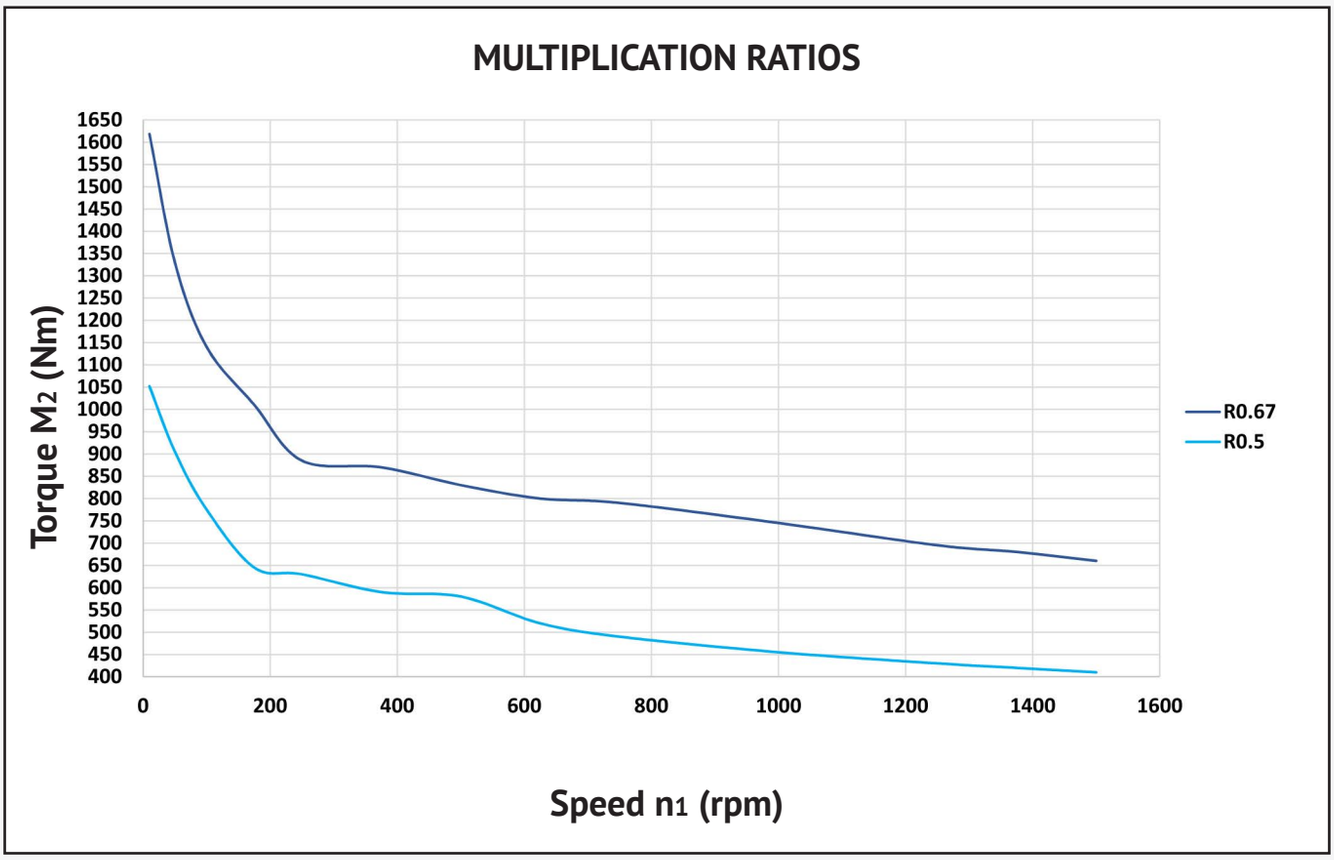

TORQUE CURVE - RA2320

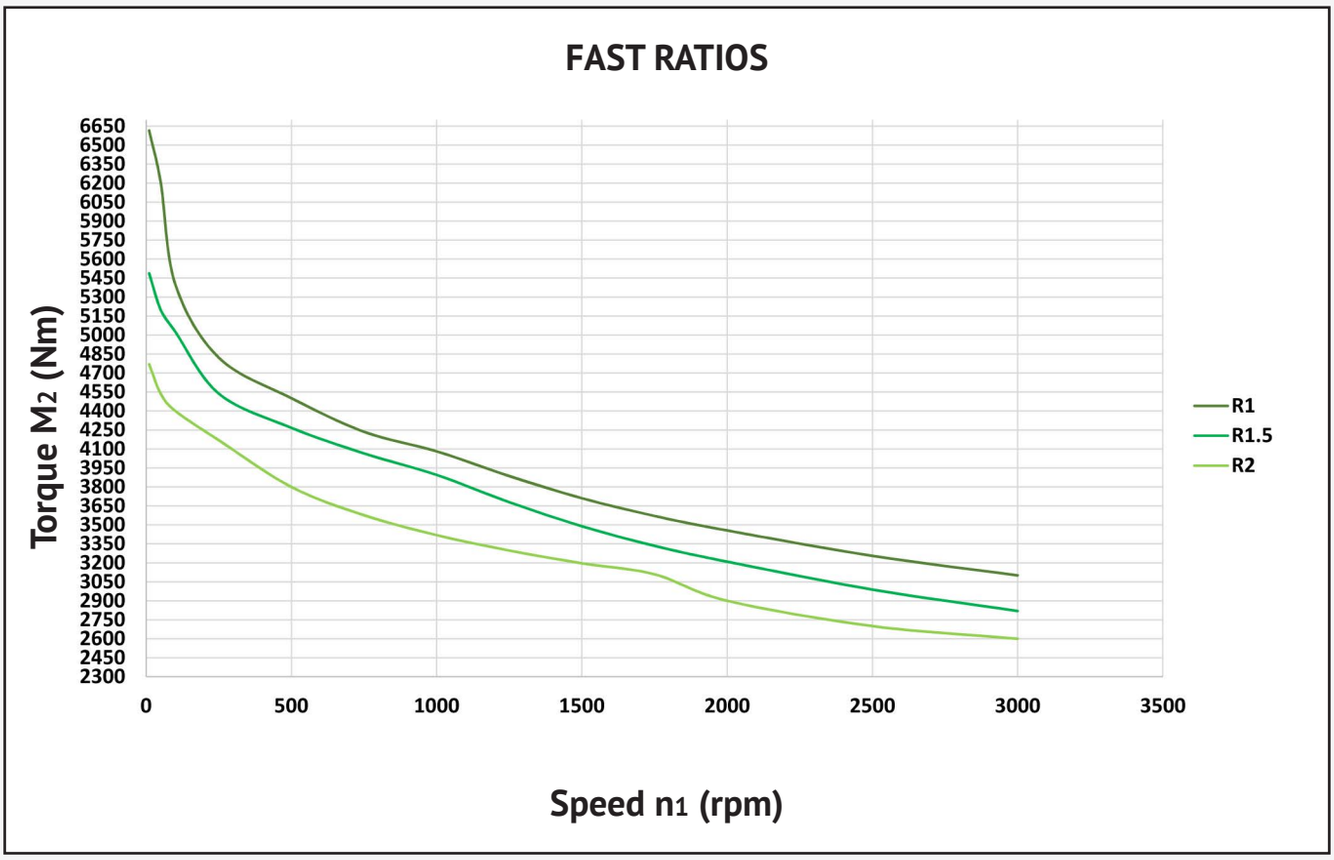

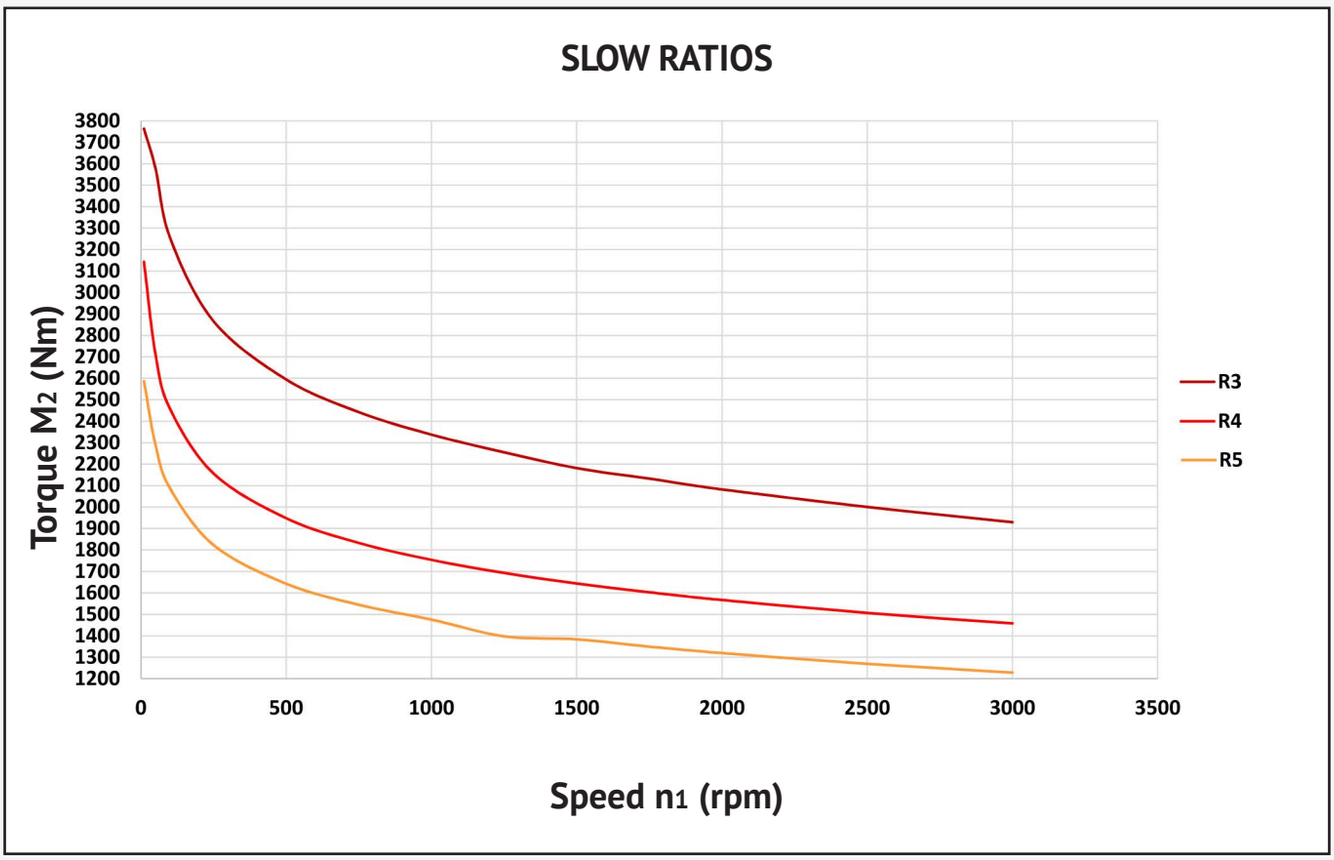

TORQUE CURVE - RA2320

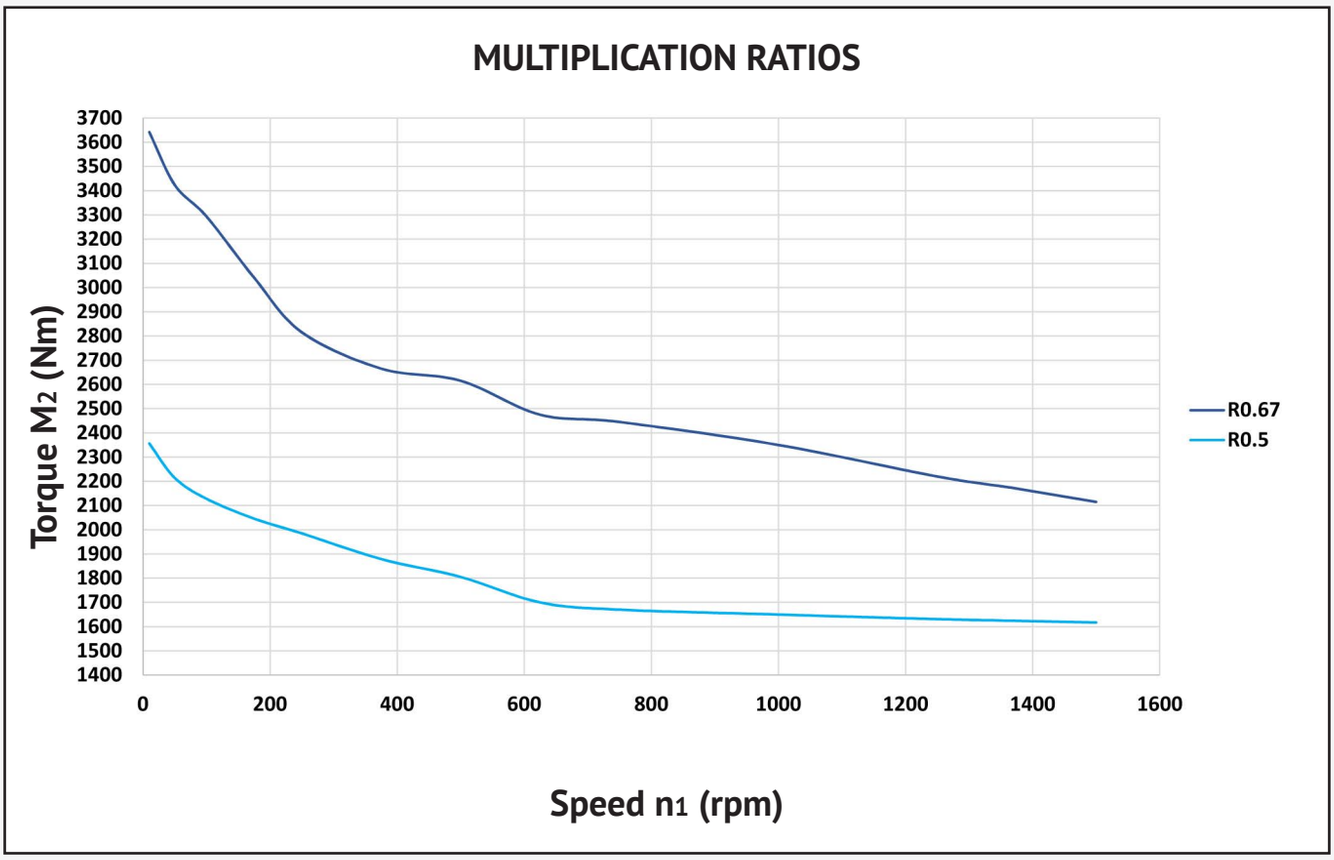

TORQUE CURVE - RA2640

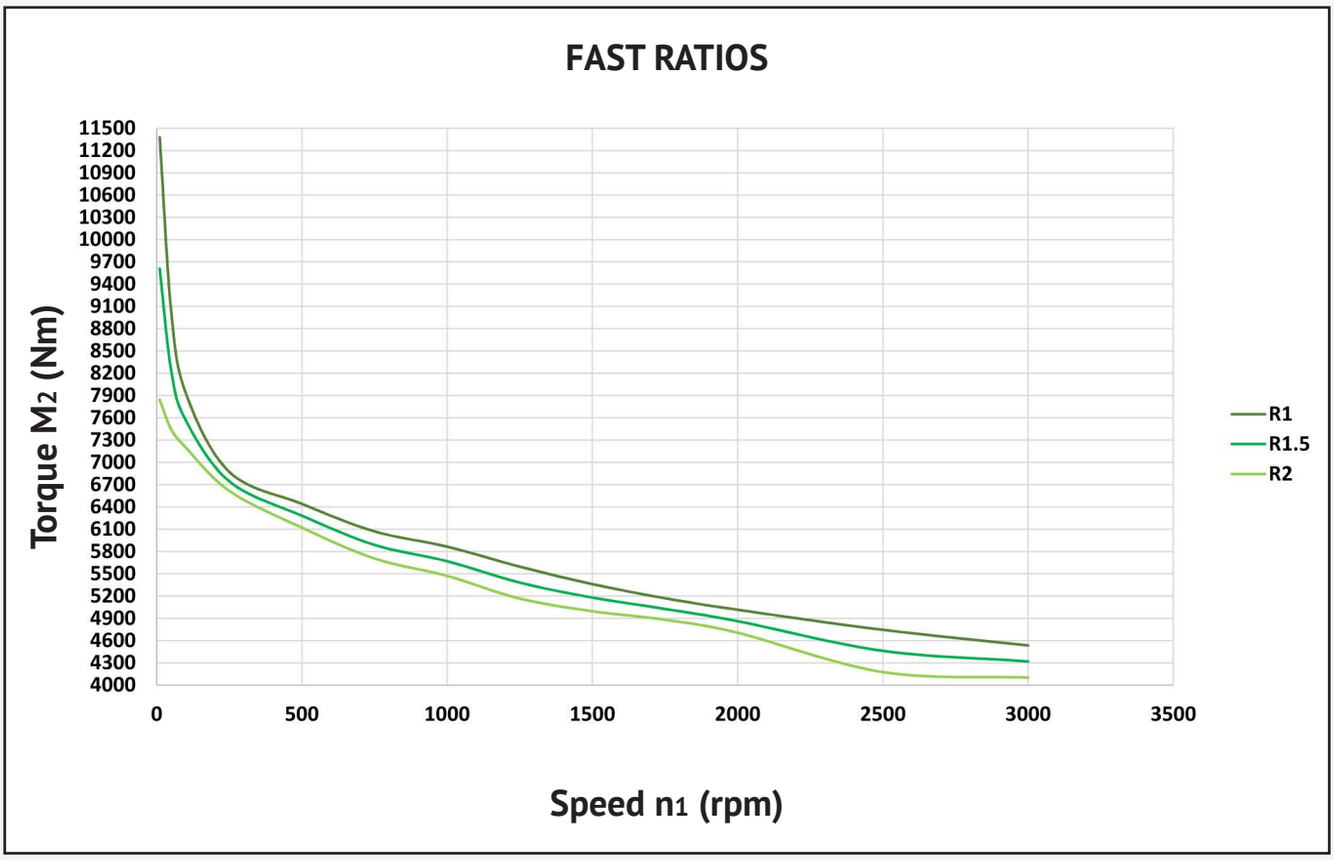

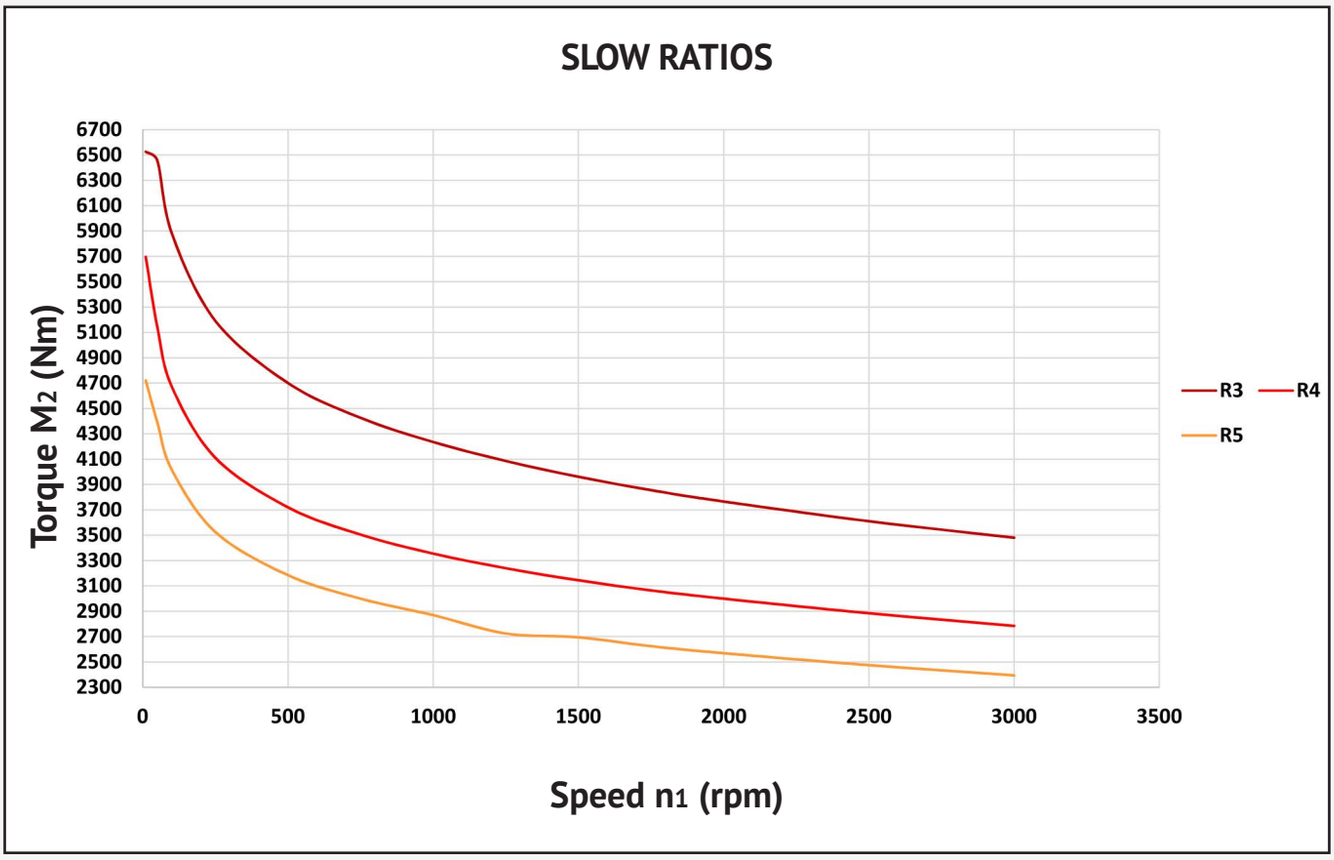

TORQUE CURVE - RA2640

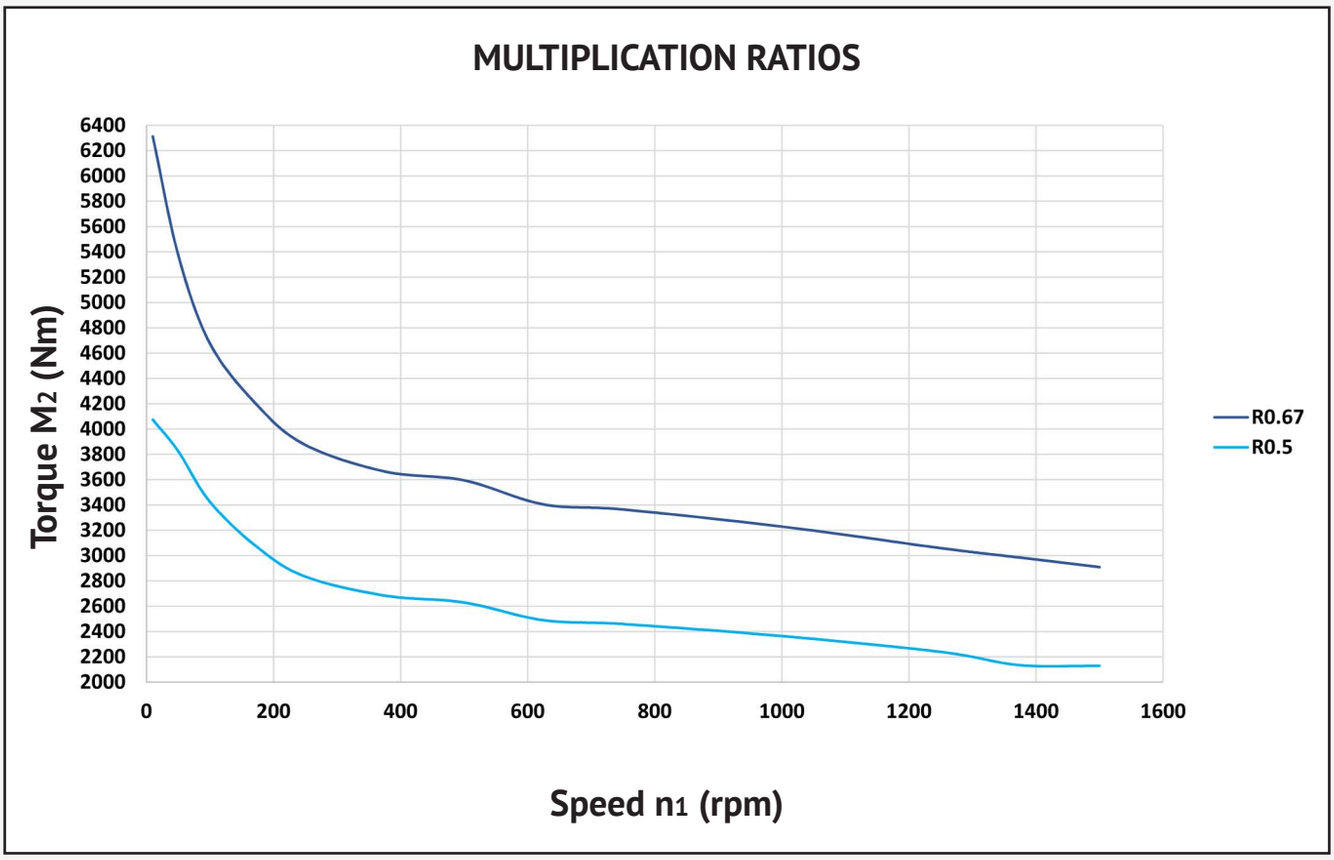

Marzorati In The World

DRIVE YOUR MOTION, EVERYWHERE

Marzorati

ANALYSIS

OPTIMISATION

IMPLEMENTATION

QUALITY IN OVER 80 COUNTRIES AND 5 CONTINENTS

THERMAL POWER LIMIT

Thermal Power Limit

During operation, if heat is not dissipated, the gearbox could reach temperatures harmful to its operation. For this reason, it is useful to observe the table of the maximum transmissible power according to the external ambient temperature. The table is based on a work cycle of 40% and medium speed and torque conditions. Changing these parameters significantly varies the values. You should contact our technical department with regard to thermal parameters and particular uses.

TRANSMISSIBLE POWER kW							
SIZE	ROOM TEMPERATURE °C						
	0	10	20	30	40	50	60
2005	4,32	4,03	3,6	3,25	2,88	2,3	1,44
2010	8,17	7,62	6,81	6,15	5,45	4,36	2,72
2020	13,2	12,3	11	9,97	8,82	7,06	4,41
2040	19,5	18,2	16,3	14,7	13	10,4	6,5
2080	29,8	27,8	24,8	22,4	19,8	15,8	9,9
2160	47,7	44,6	39,5	35,8	31,6	25,2	15,8
2320	78,7	73,4	65,1	58,9	52,1	41,4	26,0
2640	132,5	123,6	109,5	99,2	87,6	69,6	43,8

Radial Loads

In addition to the torsion given by the transmissible torque, the gearbox may be subject to radial loads on the shafts. In the event of radial loads, we recommend that you contact our technical department to check the duration limits of all internal components. The magnitude of the load limit varies greatly depending on the intensity of the load itself, the type of stress, the range and size of the gearbox.

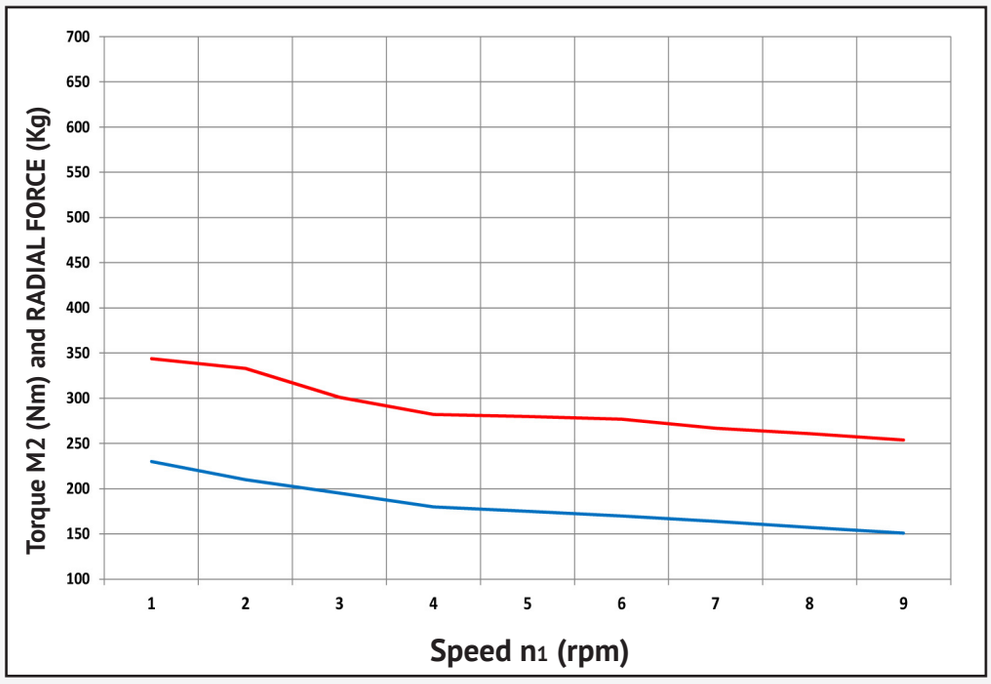

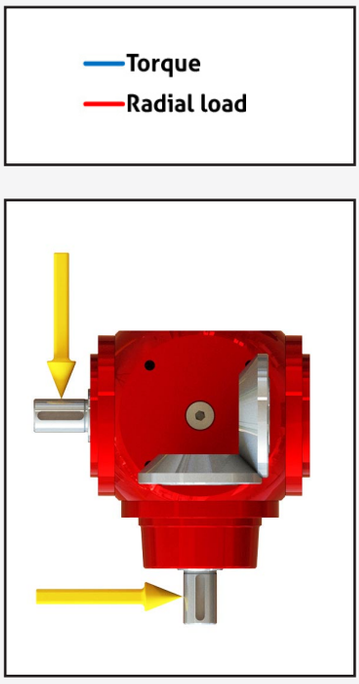

PERFORMANCE DATA

Trasmission Efficiency

Transmission efficiency varies according to size, ratio and design conditions. Below are two graphs of the efficiency of the standard series and of the high-performance torque series, which take into account the average power loss for each size and a graph that shows, for example, the efficiency of the performance curves in the various ratios.

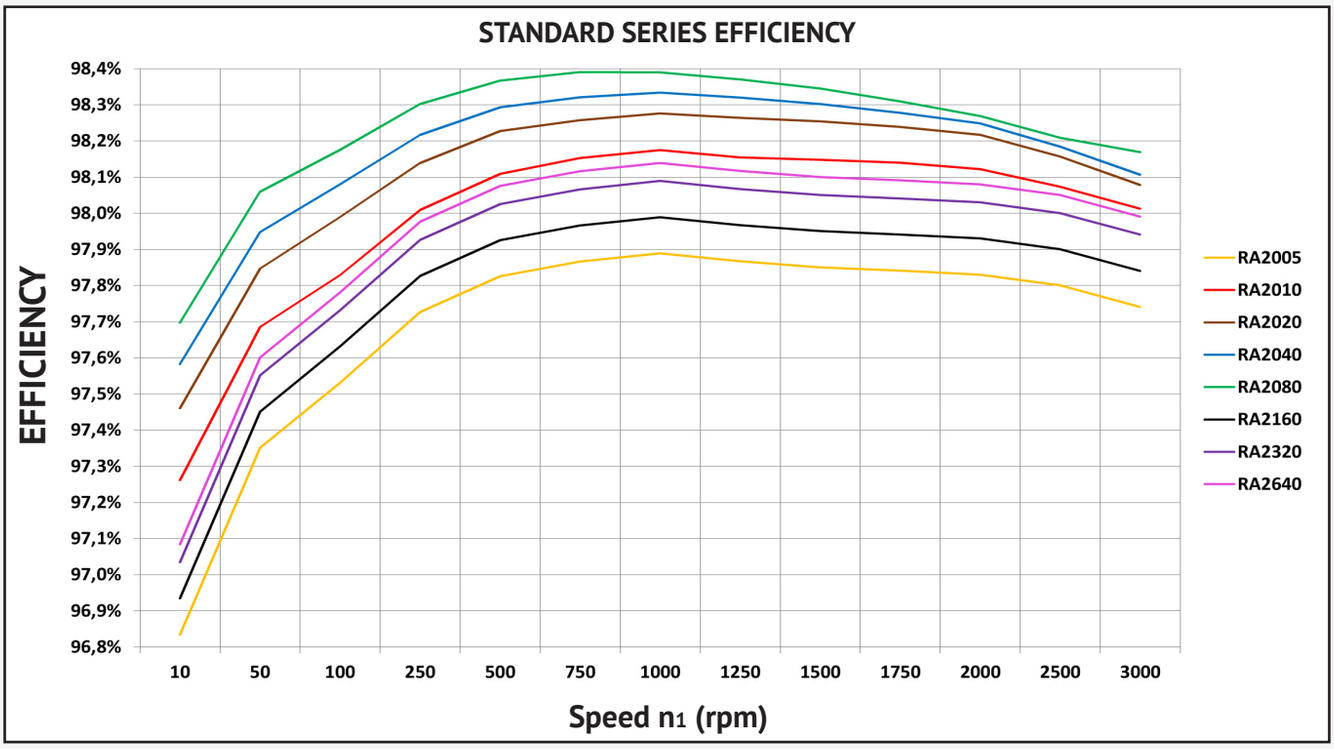

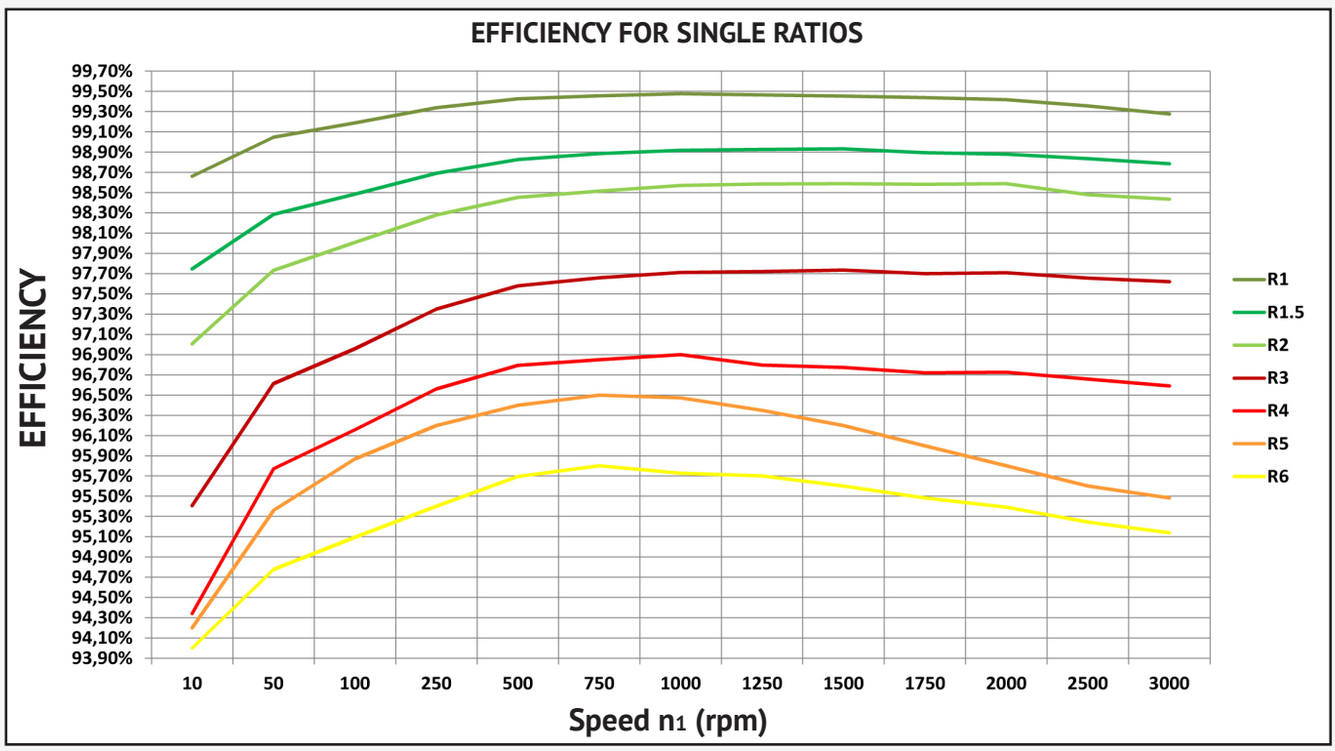

PERFORMANCE DATA

Bevel Gearboxes Connected In Series

When several bevel gearboxes are connected in series, the maximum torsional load limit must be checked. The tables below indicate the maximum torque limit calculated by unlimited shaft torsional fatigue verification. As can be seen from the table, the P range with oversized output shaft has higher torque values than the N range with standard protruding shafts.

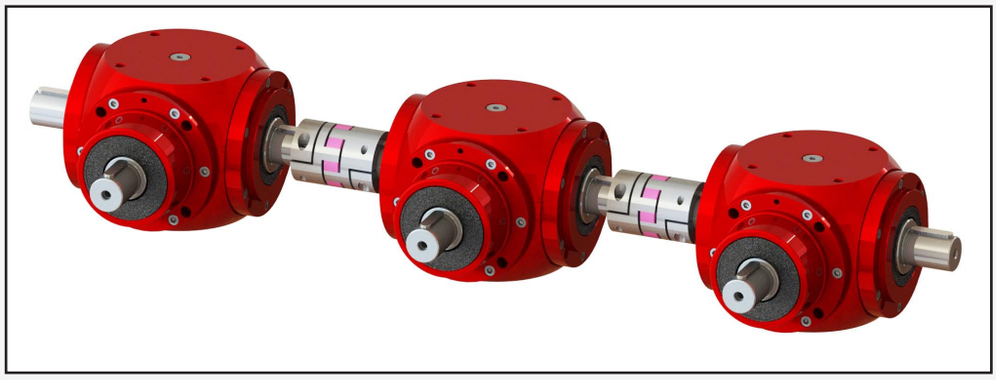

RANGE N		
SIZE	SHAFT DIAMETERS (mm)	MAX. TORQUE (Nm)
2005	14	32
2010	22	104
2020	32	322
2040	42	630
2080	55	1413
2160	65	2361
2320	75	3633
2640	90	6274

RANGE P		
SIZE	SHAFT DIAMETERS (mm)	MAX. TORQUE (Nm)
2005	20	78
2010	35	421
2020	40	628
2040	50	1064
2080	60	1839
2160	75	3633
2320	90	6274
2640	100	8612

Product Weight

The dry weight of the bevel gearbox varies according to the type. The values indicated in the table refer to the standard range N.

RA WEIGHT	
SIZE	WEIGHT (kg)
2005	3,5
2010	9
2020	18
2040	32
2080	60
2160	114
2320	220
2640	416

RA 2000 RANGE AVAILABLE

RANGE N
PROTRUDING SHAFTS

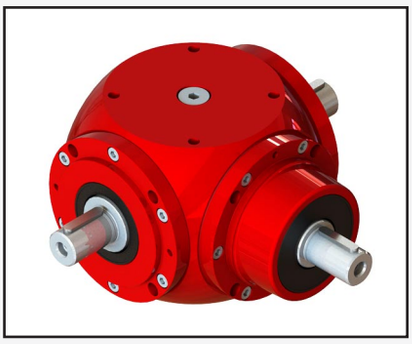

Standard shafts

RANGE P
PROTRUDING SHAFTS

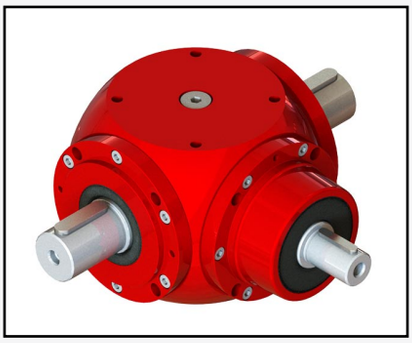

Oversized output shafts

RANGE D
COUNTER-ROTATING SHAFTS

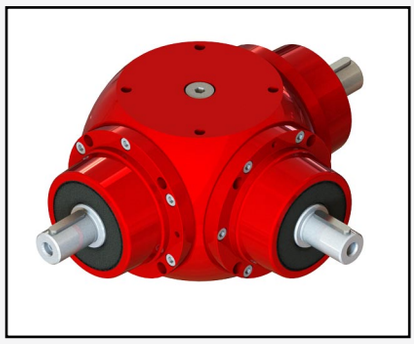

Standard shafts

RANGE C
COUNTER-ROTATING SHAFTS

Hollow shafts

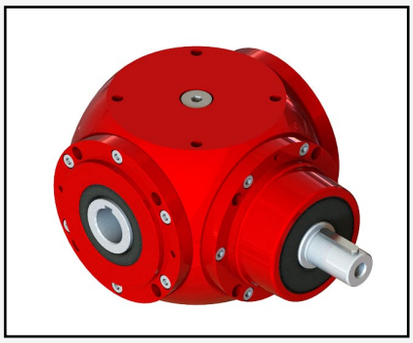

Hollow output shaft

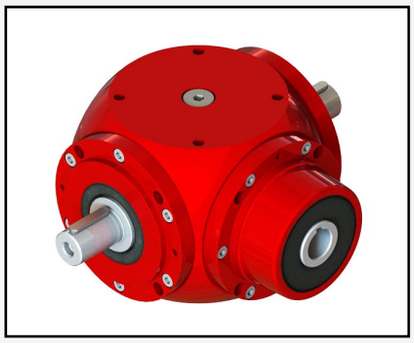

Hollow input shaft

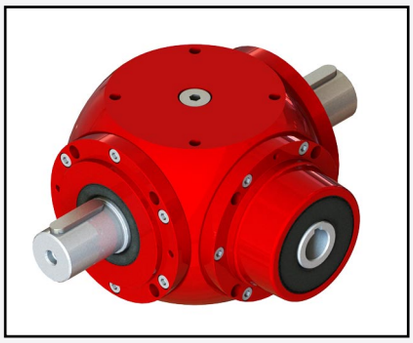

Hollow input shaft
with oversized output

RA 2000 RANGE AVAILABLE

RANGE V - SPEED MULTIPLICATION RATIO

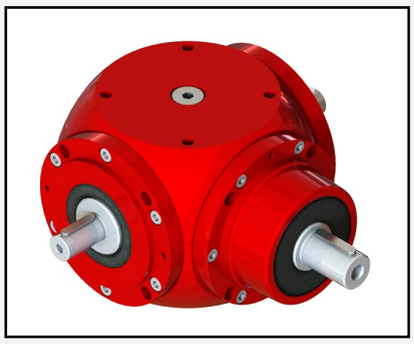

Protruding shafts

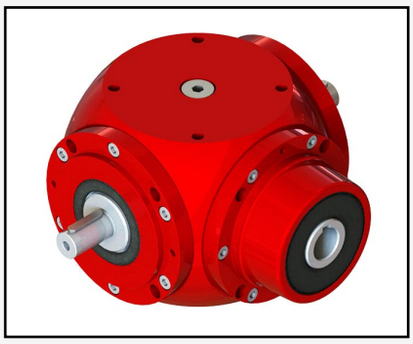

Protruding input and output hollow shaft

RANGE X - TRIDIRECTIONAL

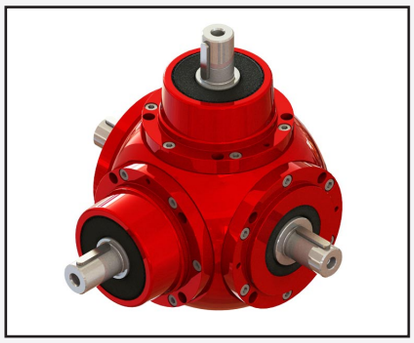

Protruding shafts / Hollow shafts

RANGE H ORTHOGONAL INVERTERS

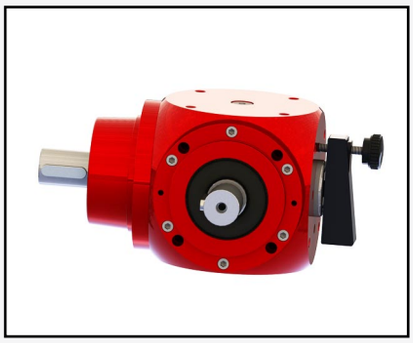

Protruding shafts / Hollow shafts

RANGE K COAXIAL INVERTERS

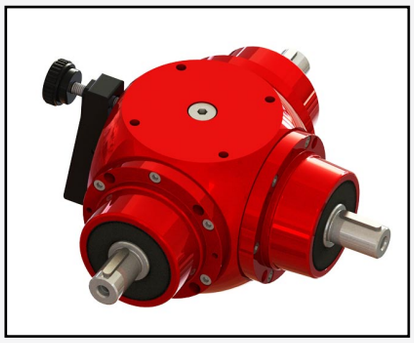

Protruding shafts / Hollow shafts

MOTOR CONNECTION ARRANGEMENT

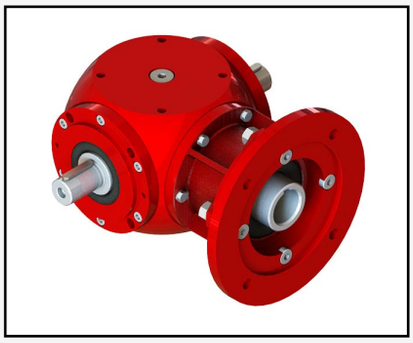

DIMENSIONAL DATA

RA N RANGE - Protruding Shafts

The N range is built with protruding shafts both in input and in output to the gearbox. The shafts can be coupled by means of a special tab mounted on them.
The range is available for ratios from 1:1 up to 5:1.

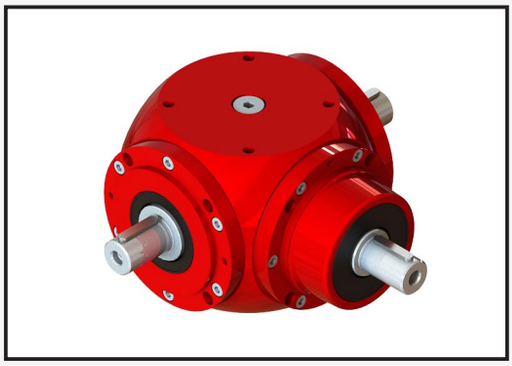

RA N RANGE - Protruding Shafts - GENERAL MEASUREMENTS

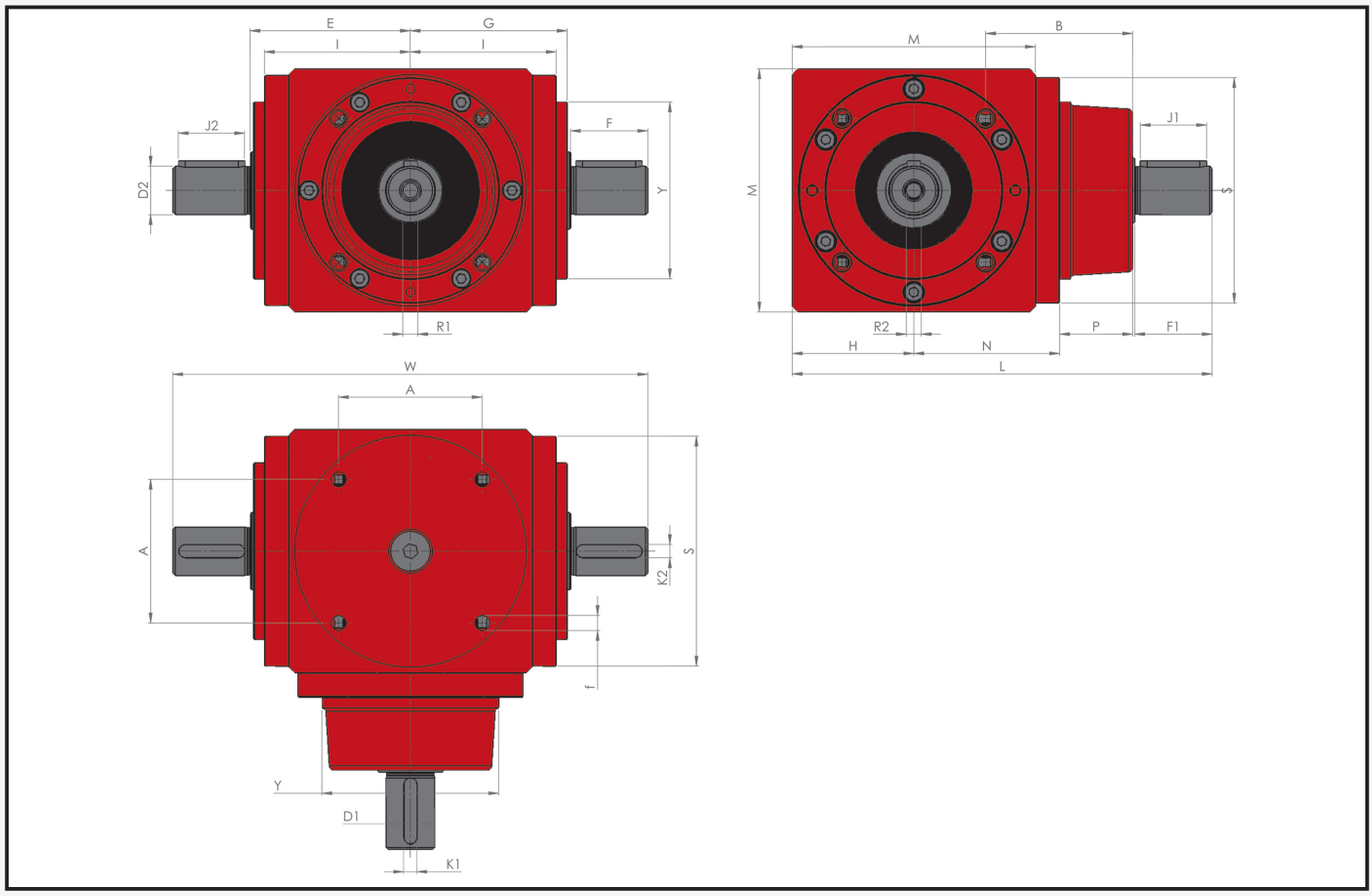

RA N RANGE - Protruding Shafts - GENERAL MEASUREMENTS																		
SIZE	A	B	E	G	H	I	f	M	N	P	Yj7	S	D2j6	F	J2	K2	R2	W
2005	48	48	52,5	51,5	40	48	M6	80	48	24	58	76	14	30	25	5	M5	165
2010	65	66,5	72,5	71	55	66	M8	110	66	33	80	104	22	35	30	6	M8	215
2020	82	86	92,5	91	70	85	M10	140	85	42	102	131	32	45	40	10	M8	275
2040	100	104	112	110	85	103	M12	170	103	51	124	158	42	60	50	12	M10	344
2080	124	126	138,5	135,5	105	125	M16	210	125	63	152	195	55	85	70	16	M12	447
2160	154	156,5	172,5	170	130	156	M16	260	156	77,5	190	243	65	100	90	18	M12	545
2320	192	216	228	215	165	197	M18	330	197	115	240	306	75	120	110	20	M16	696
2640	240	268	270	265	200	240	M22	400	240	148	300	375	90	150	140	25	M16	840

RA N RANGE - Protruding Shafts
MEASUREMENTS FOR REDUCTION RATIOS

RA N RANGE - Protruding Shafts - MEASUREMENTS FOR REDUCTION RATIOS												
	1:1 / 1.5:1 / 2:1						3:1					
SIZE	D1j6	F1	J1	K1	R1	L	D1j6	F1	J1	K1	R1	L
2005	14	30	25	5	M5	143	12	25	20	4	M4	138
2010	22	35	30	6	M8	190	22	35	30	6	M8	190
2020	32	45	40	10	M8	243	32	45	40	10	M8	243
2040	42	60	50	12	M10	300	36	55	50	10	M10	295
2080	55	85	70	16	M12	380	38	65	60	10	M10	360
2160	65	100	90	18	M12	466	55	85	70	16	M12	451
2320	75	120	110	20	M16	600	55	85	70	16	M12	565
2640	90	150	140	25	M16	740	75	120	110	20	M16	710

RA N RANGE - Protruding Shafts - MEASUREMENTS FOR REDUCTION RATIOS												
	4:1						5:1					
SIZE	D1j6	F1	J1	K1	R1	L	D1j6	F1	J1	K1	R1	L
2005	9	20	15	3	M4	133	X	X	X	X	X	X
2010	16	30	25	5	M5	185	12	22	20	4	M4	177
2020	20	32	25	6	M5	230	16	30	25	6	M5	228
2040	26	45	40	8	M8	285	22	40	35	8	M8	280
2080	32	45	40	10	M8	340	26	45	40	8	M8	340
2160	42	70	50	12	M10	436	32	58	50	10	M8	424
2320	50	75	70	15	M10	555	42	70	50	12	M10	550
2640	60	95	80	18	M12	685	55	85	70	16	M12	675

RA N RANGE - Protruding Shafts - LAYOUTS

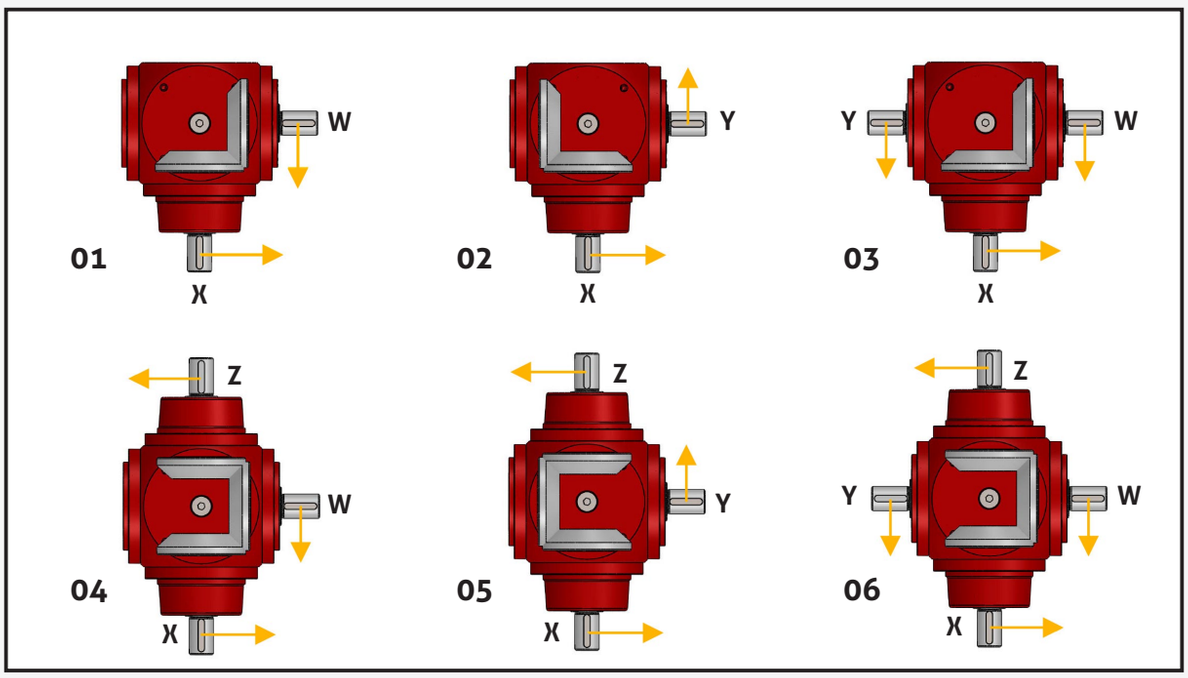

DIMENSIONAL DATA

RA P RANGE - Oversized output shafts

The P range is built with oversized protruding shafts at the gearbox output. The shafts are coupled by means of a special key mounted on them. The range is designed to meet the needs of torsional torques that only affect the output shaft, such as the case of applications with several bevel gearboxes connected in series.
The range is available for ratios from 1:1 up to 5:1.

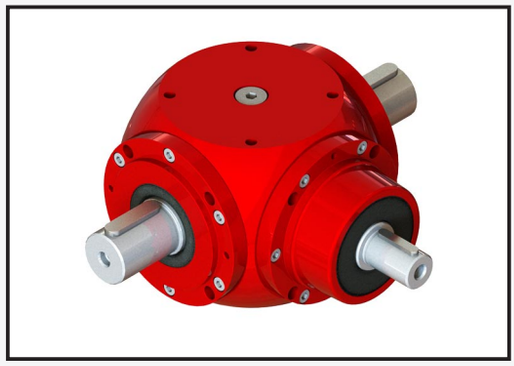

RA P RANGE - Oversized output shafts - GENERAL MEASUREMENTS

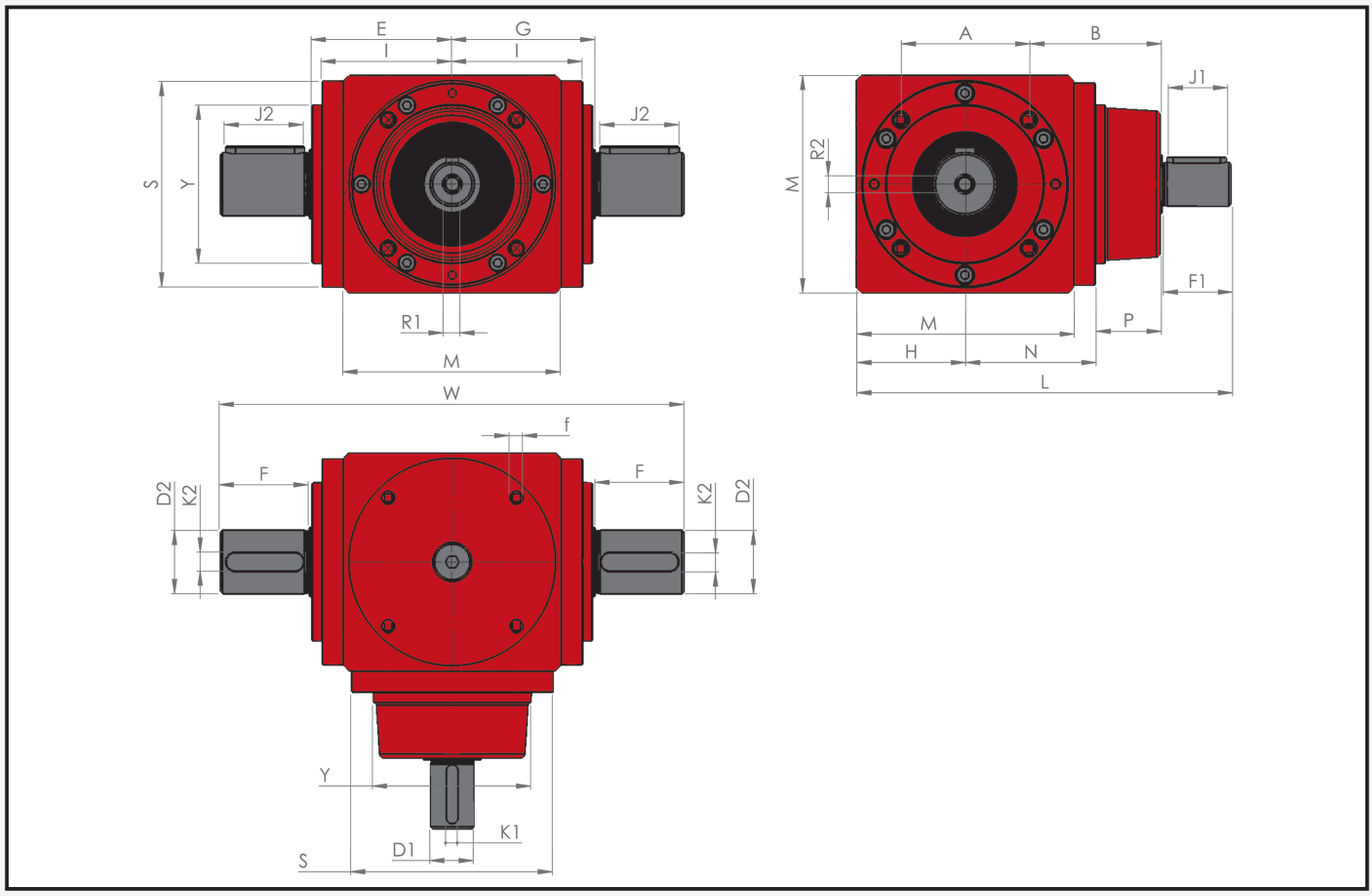

RA P RANGE - Oversized output shafts - GENERAL MEASUREMENTS																		
SIZE	A	B	E	G	H	I	f	M	N	P	Yj7	S	D2j6	F	J2	K2	R2	W
2005	48	48	52,5	51,5	40	48	M6	80	48	24	58	76	22	35	30	6	M8	175
2010	65	66,5	72,5	71	55	66	M8	110	66	33	80	104	32	45	40	10	M8	235
2020	82	86	92,5	91	70	85	M10	140	85	42	102	131	42	60	50	12	M10	305
2040	100	104	112	110	85	103	M12	170	103	51	124	158	55	85	70	16	M12	394
2080	124	126	138,5	135,5	105	125	M16	210	125	63	152	195	65	100	90	18	M12	477
2160	154	156,5	172,5	170	130	156	M16	260	156	77,5	190	243	75	120	110	20	M16	585
2320	192	216	228	215	165	197	M18	330	197	115	240	306	90	150	140	25	M16	756
2640	240	268	270	265	200	240	M22	400	240	148	300	375	100	160	150	28	M20	860

RA P RANGE - Oversized output shafts
MEASUREMENTS FOR REDUCTION RATIOS

RA P RANGE - Oversized output shafts - MEASUREMENTS FOR REDUCTION RATIOS												
	1:1 / 1.5:1 / 2:1						3:1					
SIZE	D1j6	F1	J1	K1	R1	L	D1j6	F1	J1	K1	R1	L
2005	14	30	25	5	M5	143	12	25	20	4	M4	138
2010	22	35	30	6	M8	190	22	35	30	6	M8	190
2020	32	45	40	10	M8	243	32	45	40	10	M8	243
2040	42	60	50	12	M10	300	36	55	50	10	M10	295
2080	55	85	70	16	M12	380	38	65	60	10	M10	360
2160	65	100	90	18	M12	466	55	85	70	16	M12	451
2320	75	120	110	20	M16	600	55	85	70	16	M12	565
2640	90	150	140	25	M16	740	75	120	110	20	M16	710

RA P RANGE - Oversized output shafts - MEASUREMENTS FOR REDUCTION RATIOS												
	4:1						5:1					
SIZE	D1j6	F1	J1	K1	R1	L	D1j6	F1	J1	K1	R1	L
2005	9	20	15	3	M4	133	X	X	X	X	X	X
2010	16	30	25	5	M5	185	12	22	20	4	M4	177
2020	20	32	25	6	M5	230	16	30	25	6	M5	228
2040	26	45	40	8	M8	285	22	40	35	8	M8	280
2080	32	45	40	10	M8	340	26	45	40	8	M8	340
2160	42	70	50	12	M10	436	32	58	50	10	M8	424
2320	50	75	70	15	M10	555	42	70	50	12	M10	550
2640	60	95	80	18	M12	685	55	85	70	16	M12	675

RA P RANGE - Oversized output shafts - LAYOUTS

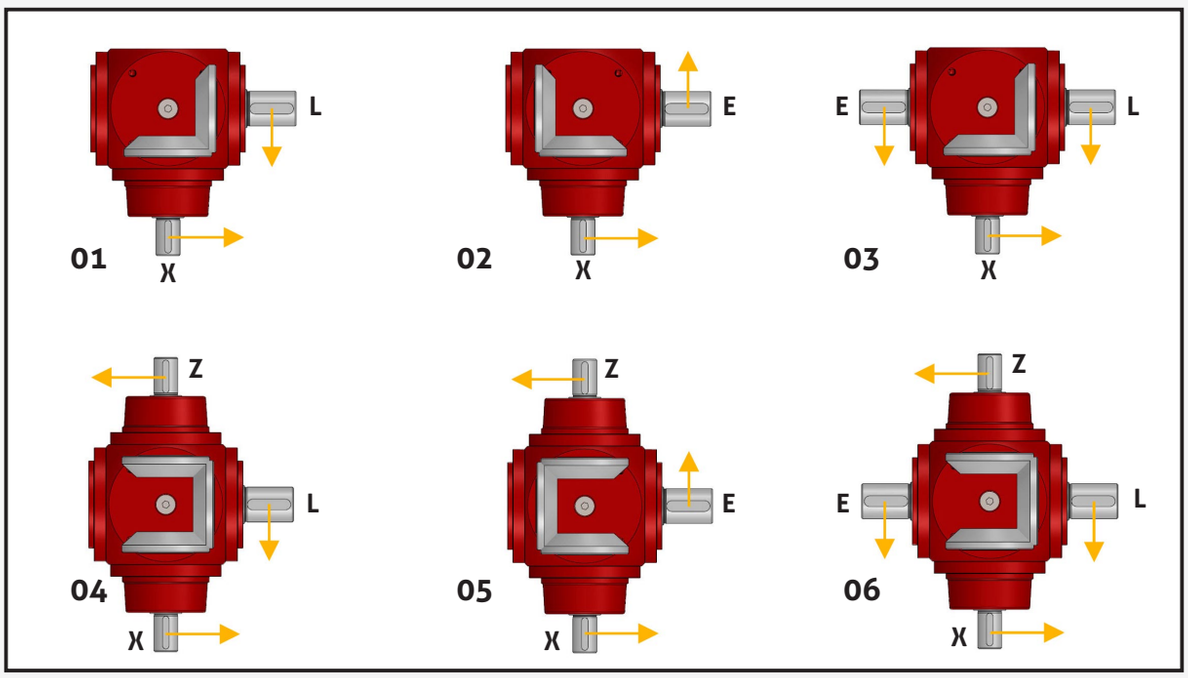

DIMENSIONAL DATA

RA D RANGE - Counter-rotating shafts

The protruding shaft D range is built to have counter-rotating output shafts. Instead of having a through shaft, as in the case of the N range, it is equipped with two shafts that rotate in the opposite direction to each other. These are housed on the same type of connection used for the input, making the transmission more cumbersome than the N range.

The range is available for ratios from 1:1 up to 5:1

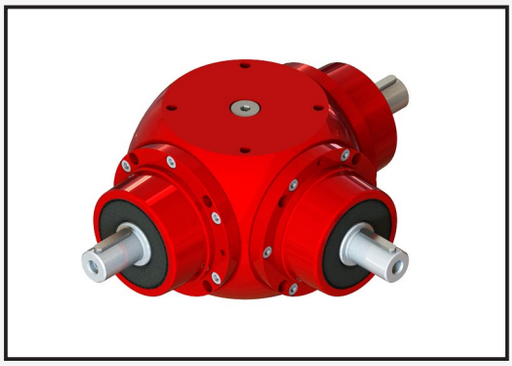

RA D RANGE - Counter-rotating shafts - GENERAL MEASUREMENTS

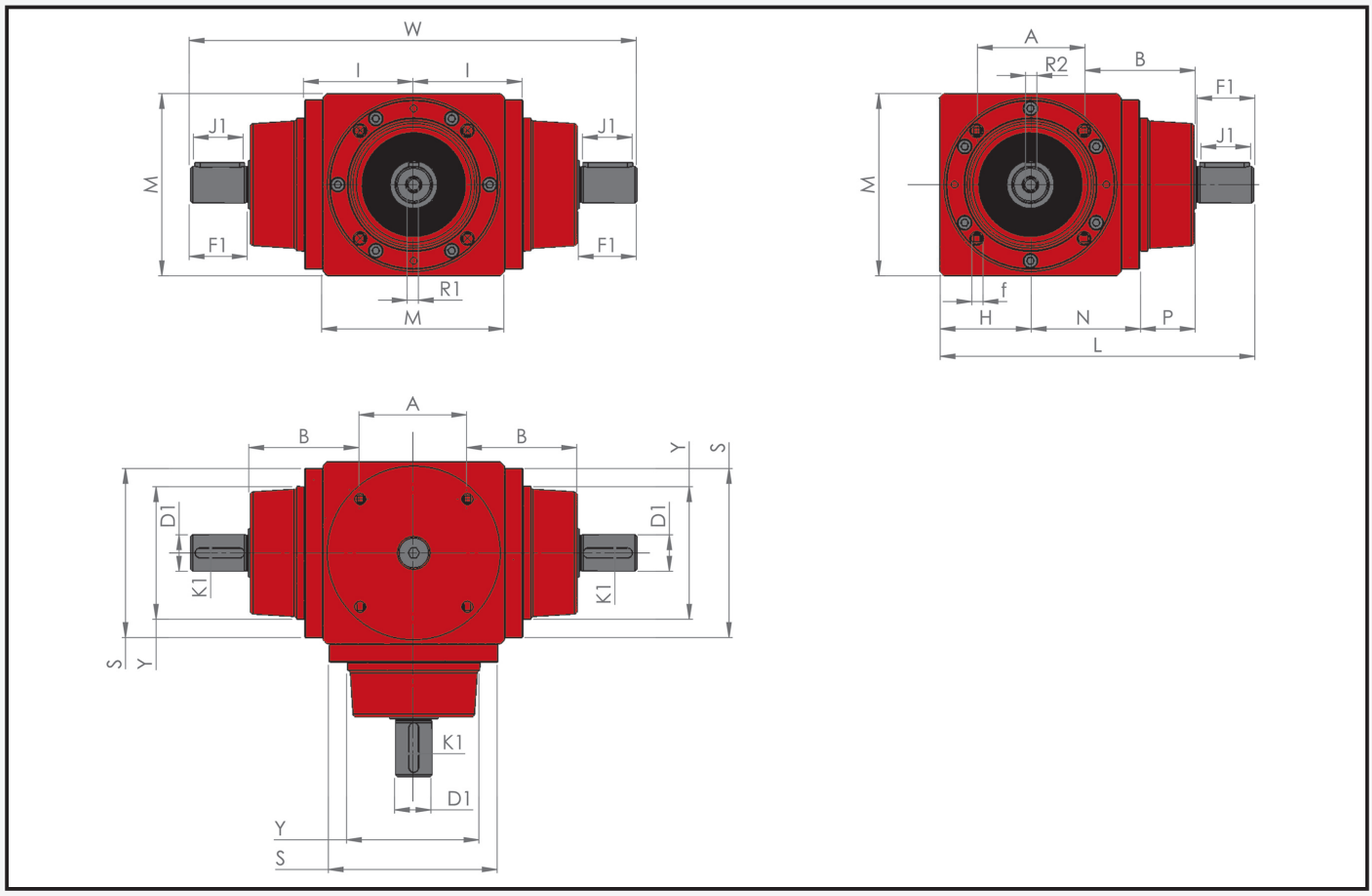

RA D RANGE - Counter-rotating shafts - GENERAL MEASUREMENTS									
SIZE	A	B	I	f	M	N	P	Yj7	S
2005	48	48	48	M6	80	48	24	58	76
2010	65	66,5	66	M8	110	66	33	80	104
2020	82	86	85	M10	140	85	42	102	131
2040	100	104	103	M12	170	103	51	124	158
2080	124	126	125	M16	210	125	63	152	195
2160	154	156,5	156	M16	260	156	77,5	190	243
2320	192	216	197	M18	330	197	115	240	306
2640	240	268	240	M22	400	240	148	300	375

RA D RANGE - Counter-rotating shafts
MEASUREMENTS FOR REDUCTION RATIOS

RA D RANGE - Counter-rotating shafts - MEASUREMENTS FOR REDUCTION RATIOS														
	1:1 / 1.5:1 / 2:1							3:1						
SIZE	D1j6	F1	J1	K1	R1	L	W	D1j6	F1	J1	K1	R1	L	W
2005	14	30	25	5	M5	143	206	12	25	20	4	M4	138	196
2010	22	35	30	6	M8	190	270	22	35	30	6	M8	190	270
2020	32	45	40	10	M8	243	346	32	45	40	10	M8	243	346
2040	42	60	50	12	M10	300	430	36	55	50	10	M10	295	420
2080	55	85	70	16	M12	380	550	38	65	60	10	M10	360	510
2160	65	100	90	18	M12	466	672	55	85	70	16	M12	451	642
2320	75	120	110	20	M16	600	870	55	85	70	16	M12	565	800
2640	90	150	140	25	M16	740	1080	75	120	110	20	M16	710	1020

RA D RANGE - Counter-rotating shafts - MEASUREMENTS FOR REDUCTION RATIOS														
	4:1							5:1						
SIZE	D1j6	F1	J1	K1	R1	L	W	D1j6	F1	J1	K1	R1	L	W
2005	9	20	15	3	M4	133	186	X	X	X	X	X	X	X
2010	16	30	25	5	M5	185	260	12	22	20	4	M4	177	244
2020	20	32	25	6	M5	230	320	16	30	25	6	M5	228	316
2040	26	45	40	8	M8	285	400	22	40	35	8	M8	280	390
2080	32	45	40	10	M8	340	470	26	45	40	8	M8	340	470
2160	42	70	50	12	M10	436	612	32	58	50	10	M8	424	588
2320	50	75	70	15	M10	555	780	42	70	50	12	M10	550	770
2640	60	95	80	18	M12	685	970	55	85	70	16	M12	675	950

RA D RANGE - Counter-rotating shafts - LAYOUTS

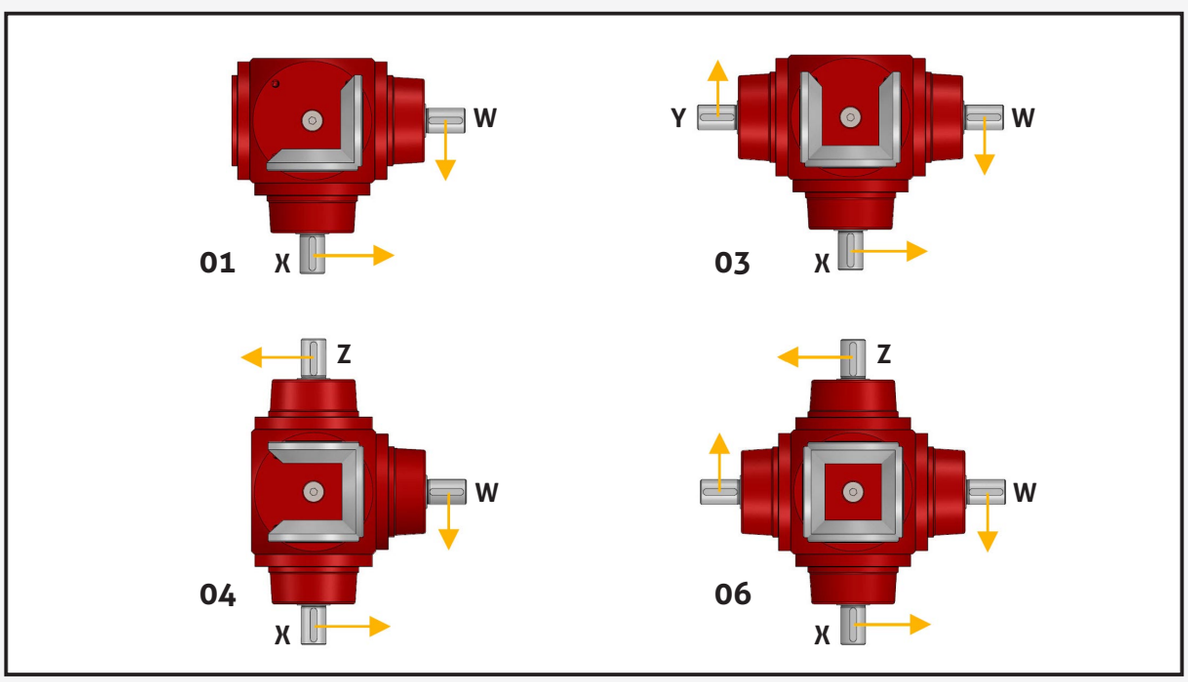

DIMENSIONAL DATA

RA C RANGE - Hollow shafts with key

The C range is built to have at least one hollow shaft, with which the customer can couple their own shaft to the bevel gearbox. In this configuration, all shafts are hollow.
The range is available for ratios from 1:1 , 1.5:1 , 2:1

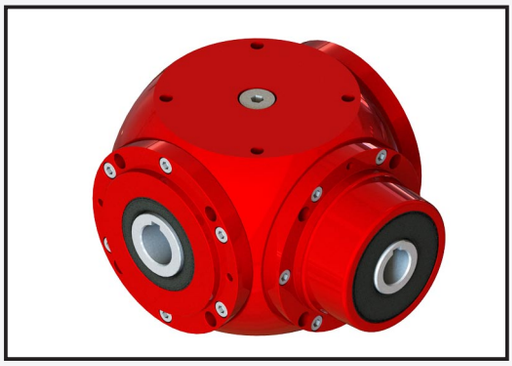

RA C RANGE - Hollow shafts with key - GENERAL MEASUREMENTS

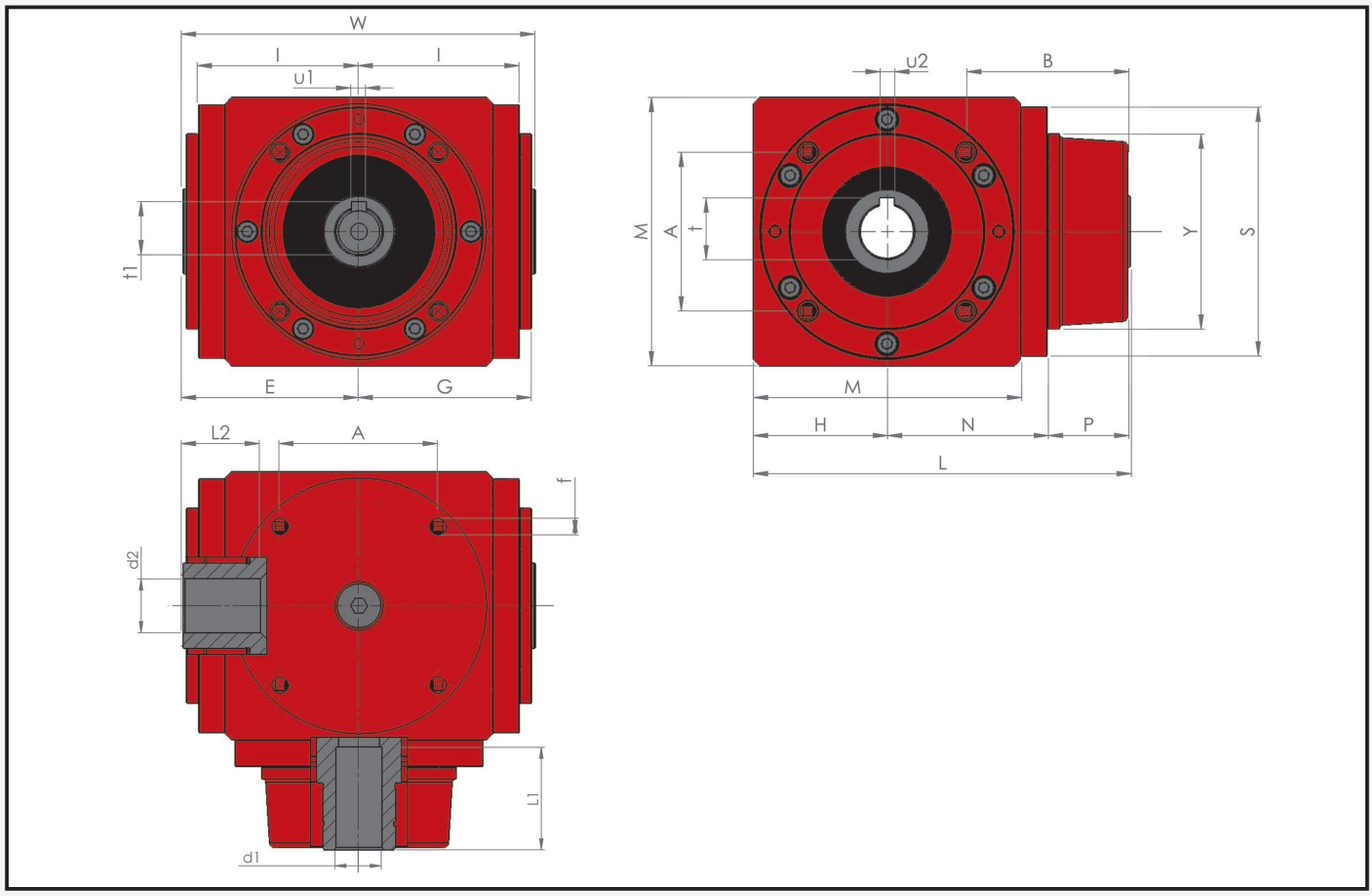

RA C RANGE - Hollow shafts with key - GENERAL MEASUREMENTS																	
SIZE	A	B	E	G	H	I	f	M	N	P	Yj7	S	d2H7	L2	W	u	t
2005	48	48	52,5	51,5	40	48	M6	80	48	24	58	76	14	25	105	5	16,3
2010	65	66,5	72,5	71	55	66	M8	110	66	33	80	104	22	32	145	6	24,8
2020	82	86	92,5	91	70	85	M10	140	85	42	102	131	32	45	185	10	35,3
2040	100	104	112	110	85	103	M12	170	103	51	124	158	42	60	224	12	45,3
2080	124	126	138,5	135,5	105	125	M16	210	125	63	152	195	55	85	277	16	59,3
2160	154	156,5	172,5	170	130	156	M16	260	156	77,5	190	243	65	100	345	18	69,4

RA C RANGE - Hollow shafts with key
GENERAL MEASUREMENTS

RA C RANGE - Hollow shafts with key - GENERAL MEASUREMENTS					
SIZE	d1H7	u1	t1	L1	L
2005	14	5	16,3	31	113
2010	19	6	21,8	41	155
2020	24	8	27,3	52	198
2040	38	10	41,3	82	240
2080	48	14	51,8	112	195
2160	55	16	59,3	112	366

RA C RANGE - Hollow shafts with key - LAYOUTS

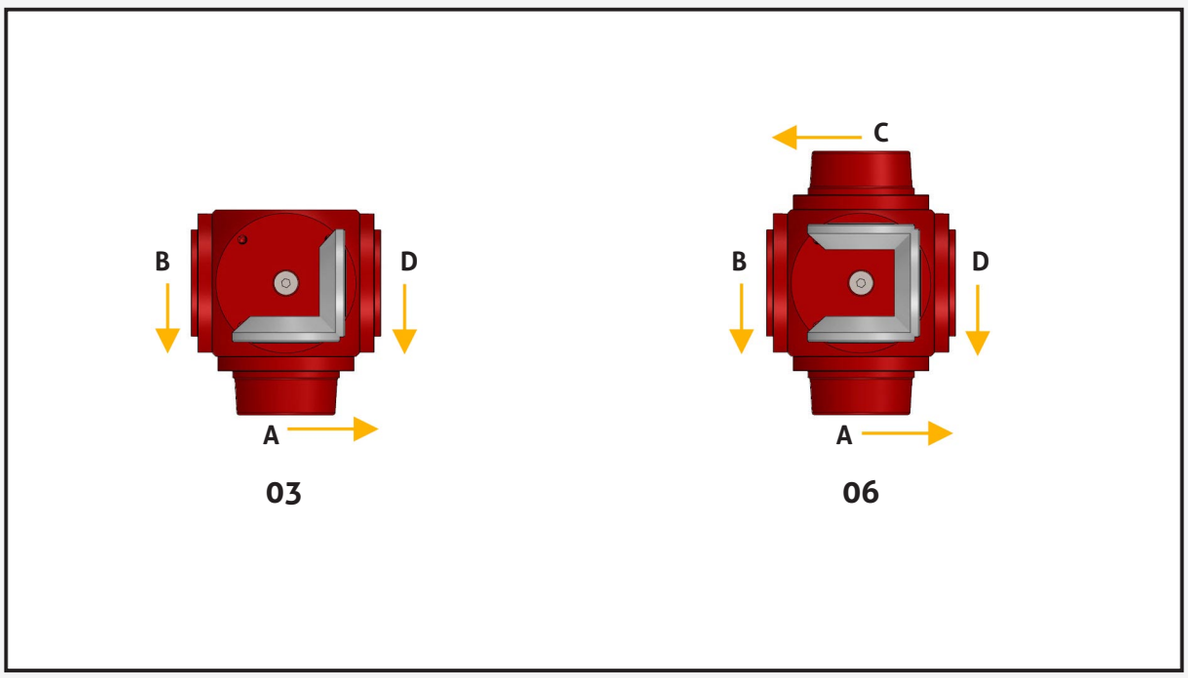

DIMENSIONAL DATA

RA C RANGE - Hollow output shaft

The C range is built to have at least one hollow shaft, with which the customer can couple their own shaft to the bevel gearbox. In this configuration, the input shaft is protruding, while the output shaft is hollow with a key seat.

The range is available for ratios from 1:1 up to 5:1.

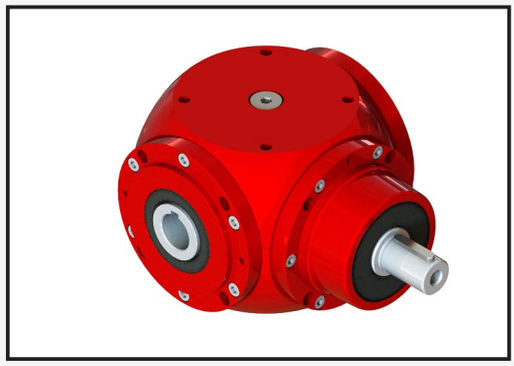

RA C RANGE - Hollow output shaft - GENERAL MEASUREMENTS

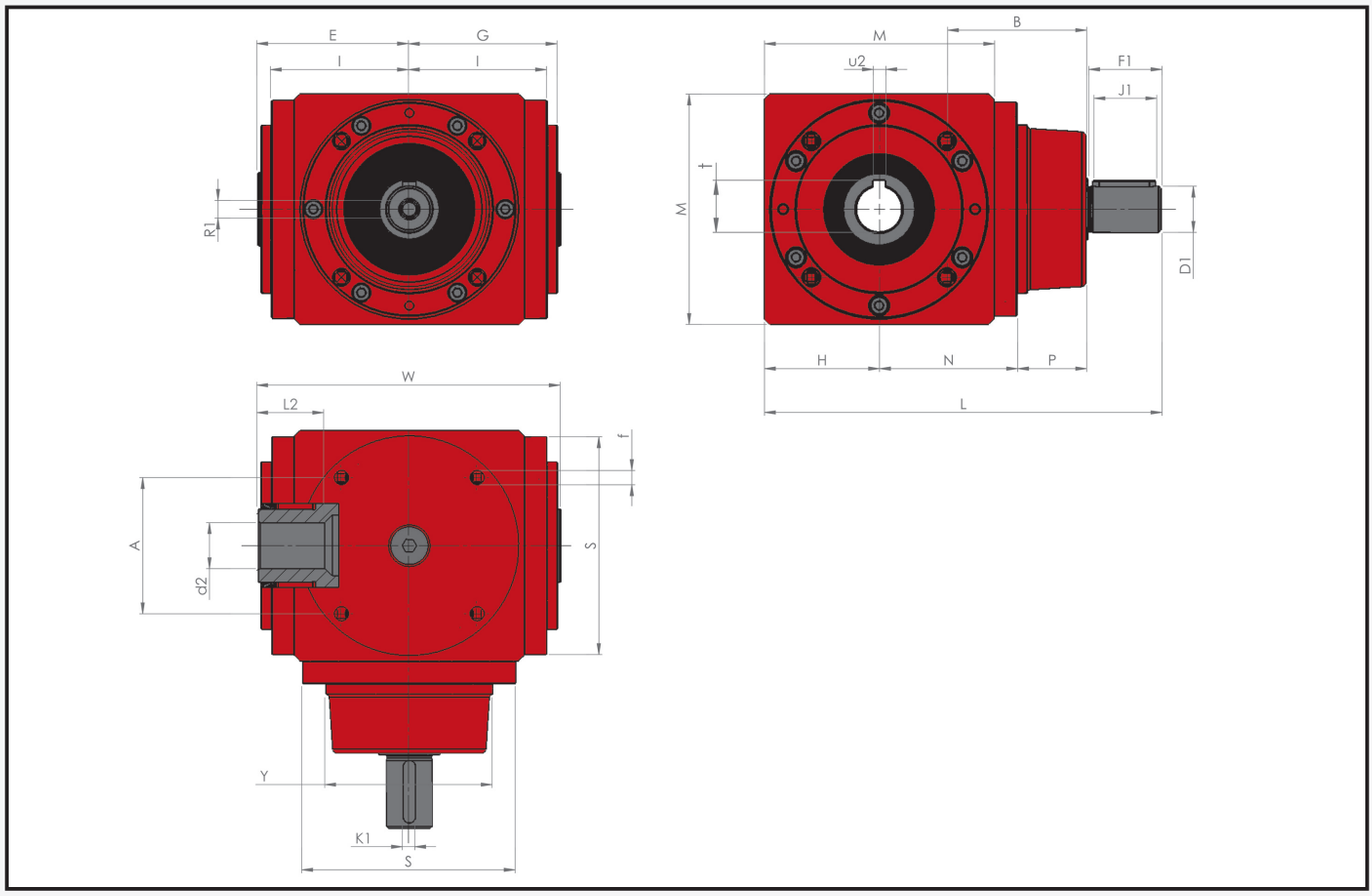

RA C RANGE - Hollow output shaft - GENERAL MEASUREMENTS																	
SIZE	A	B	E	G	H	I	f	M	N	P	Yj7	S	d2H7	L2	W	u	t
2005	48	48	52,5	51,5	40	48	M6	80	48	24	58	76	14	25	105	5	16,3
2010	65	66,5	72,5	71	55	66	M8	110	66	33	80	104	22	32	145	6	24,8
2020	82	86	92,5	91	70	85	M10	140	85	42	102	131	32	45	185	10	35,3
2040	100	104	112	110	85	103	M12	170	103	51	124	158	42	60	224	12	45,3
2080	124	126	138,5	135,5	105	125	M16	210	125	63	152	195	55	85	277	16	59,3
2160	154	156,5	172,5	170	130	156	M16	260	156	77,5	190	243	65	100	345	18	69,4
2320	192	216	228	215	165	197	M18	330	197	115	240	306	70	120	440	20	74,9
2640	240	268	270	265	200	240	M22	400	240	148	300	375	80	130	540	22	85,4

RA C RANGE - Hollow output shaft
MEASUREMENTS FOR REDUCTION RATIOS

RA C RANGE - Hollow output shaft - MEASUREMENTS FOR REDUCTION RATIOS												
	1:1 / 1.5:1 / 2:1						3:1					
SIZE	D1j6	F1	J1	K1	R1	L	D1j6	F1	J1	K1	R1	L
2005	14	30	25	5	M5	143	12	25	20	4	M4	138
2010	22	35	30	6	M8	190	22	35	30	6	M8	190
2020	32	45	40	10	M8	243	32	45	40	10	M8	243
2040	42	60	50	12	M10	300	36	55	50	10	M10	295
2080	55	85	70	16	M12	380	38	65	60	10	M10	360
2160	65	100	90	18	M12	466	55	85	70	16	M12	451
2320	75	120	110	20	M16	600	55	85	70	16	M12	565
2640	90	150	140	25	M16	740	75	120	110	20	M16	710

RA C RANGE - Hollow output shaft - MEASUREMENTS FOR REDUCTION RATIOS												
	4:1						5:1					
SIZE	D1j6	F1	J1	K1	R1	L	D1j6	F1	J1	K1	R1	L
2005	9	20	15	3	M4	133	X	X	X	X	X	X
2010	16	30	25	5	M5	185	12	22	20	4	M4	177
2020	20	32	25	6	M5	230	16	30	25	6	M5	228
2040	26	45	40	8	M8	285	22	40	35	8	M8	280
2080	32	45	40	10	M8	340	26	45	40	8	M8	340
2160	42	70	50	12	M10	436	32	58	50	10	M8	424
2320	50	75	70	15	M10	555	42	70	50	12	M10	550
2640	60	95	80	18	M12	685	55	85	70	16	M12	675

RA C RANGE - Hollow output shaft - LAYOUT

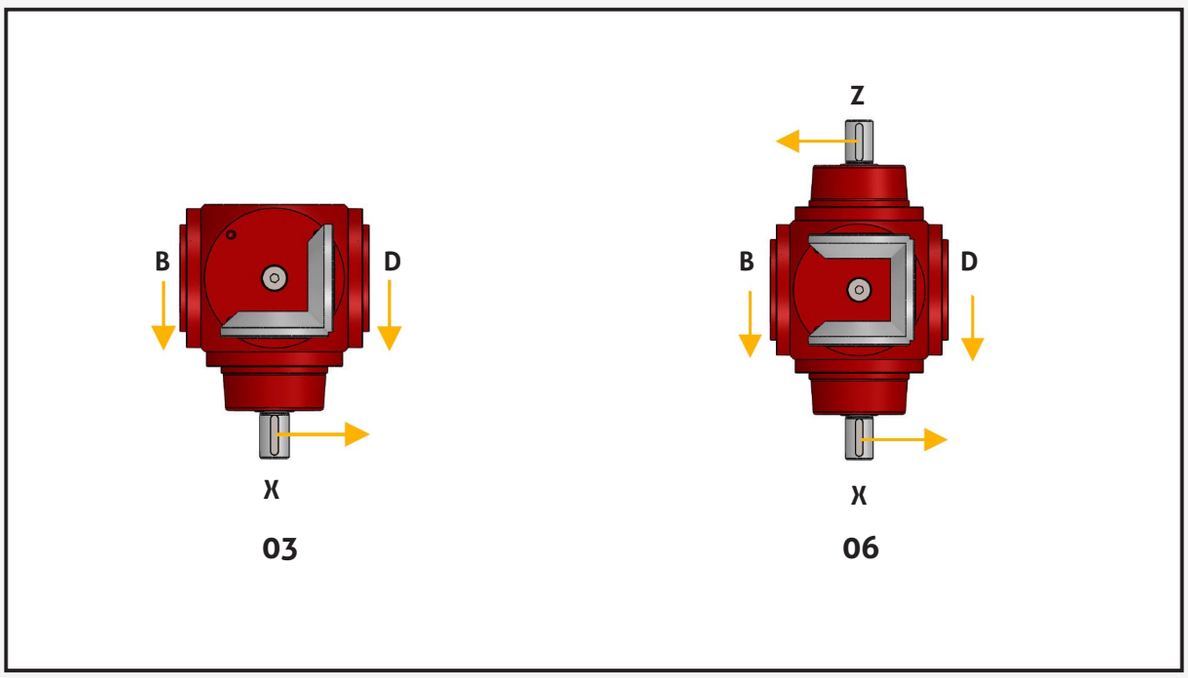

DIMENSIONAL DATA

RA C RANGE - Hollow input shaft

The C range is built to have at least one hollow shaft, with which the customer can couple their own shaft to the bevel gearbox. In this configuration, the input shaft is hollow with a key seat, while the output shaft is protruding.
The range is available for ratios from 1:1 , 1.5:1 , 2:1

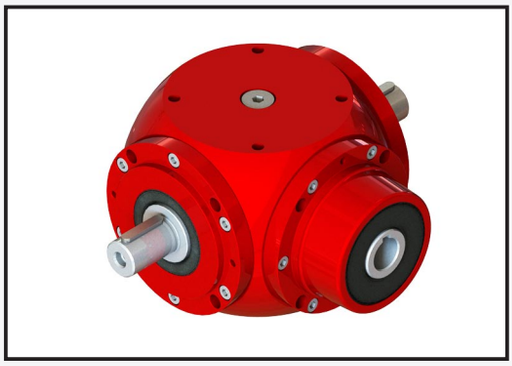

RA C RANGE - Hollow input shaft - GENERAL MEASUREMENTS

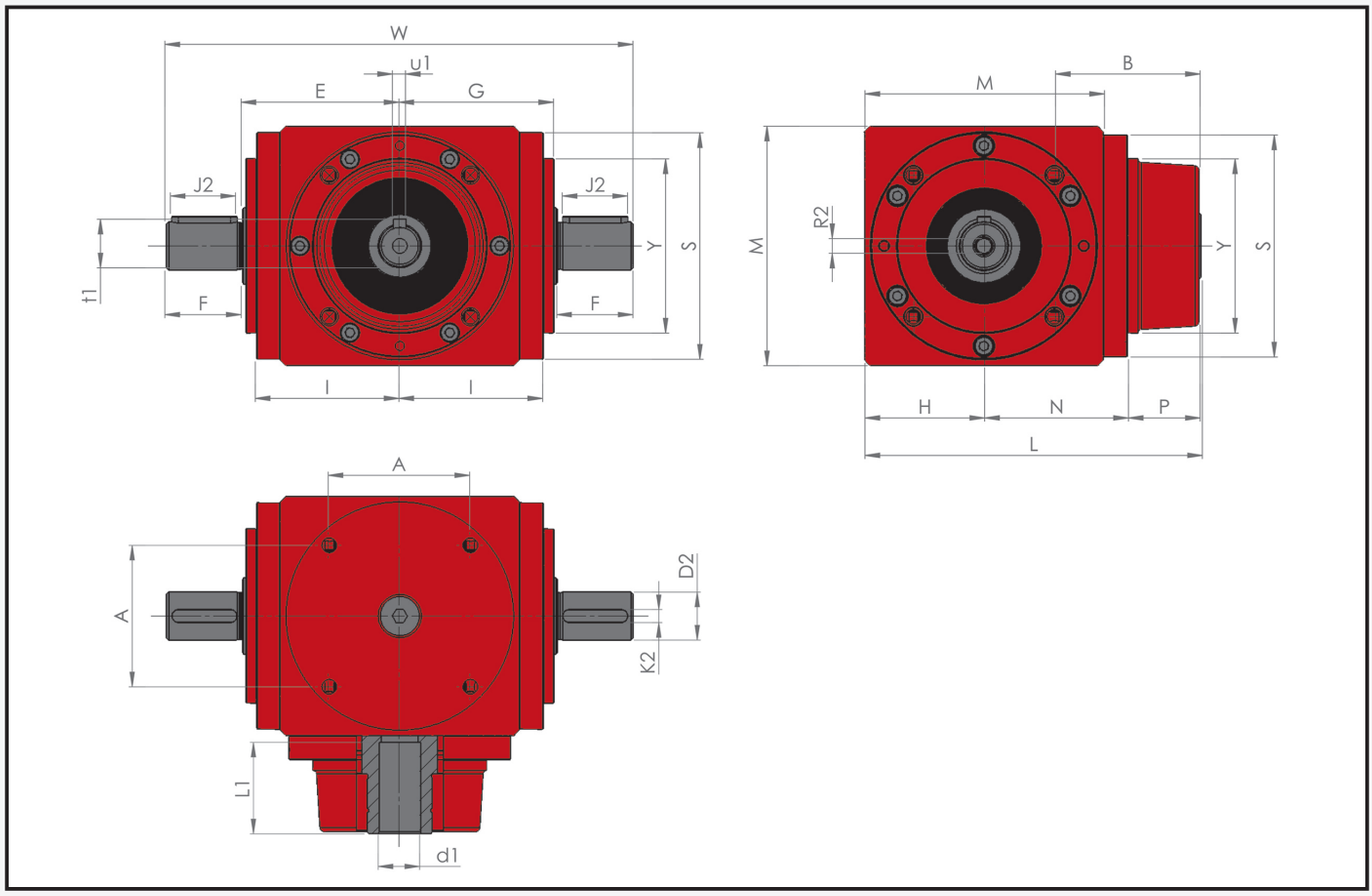

RA C RANGE - Hollow input shaft - GENERAL MEASUREMENTS																		
SIZE	A	B	E	G	H	I	f	M	N	P	Yj7	S	D2j6	F	J2	K2	R2	W
2005	48	48	52,5	51,5	40	48	M6	80	48	24	58	76	14	30	25	5	M5	175
2010	65	66,5	72,5	71	55	66	M8	110	66	33	80	104	22	35	30	6	M8	235
2020	82	86	92,5	91	70	85	M10	140	85	42	102	131	32	45	40	10	M8	305
2040	100	104	112	110	85	103	M12	170	103	51	124	158	42	60	50	12	M10	394
2080	124	126	138,5	135,5	105	125	M16	210	125	63	152	195	55	85	70	16	M12	447
2160	154	156,5	172,5	170	130	156	M16	260	156	77,5	190	243	65	100	90	18	M12	585

RA C RANGE - Hollow input shaft
GENERAL MEASUREMENTS

RA C RANGE - Hollow shafts with key - GENERAL MEASUREMENTS					
SIZE	d1H7	u1	t1	L1	L
2005	14	5	16,3	31	113
2010	19	6	21,8	41	155
2020	24	8	27,3	52	198
2040	38	10	41,3	82	240
2080	48	14	51,8	112	195
2160	55	16	59,3	112	366

RA C RANGE - Hollow input shaft - LAYOUT

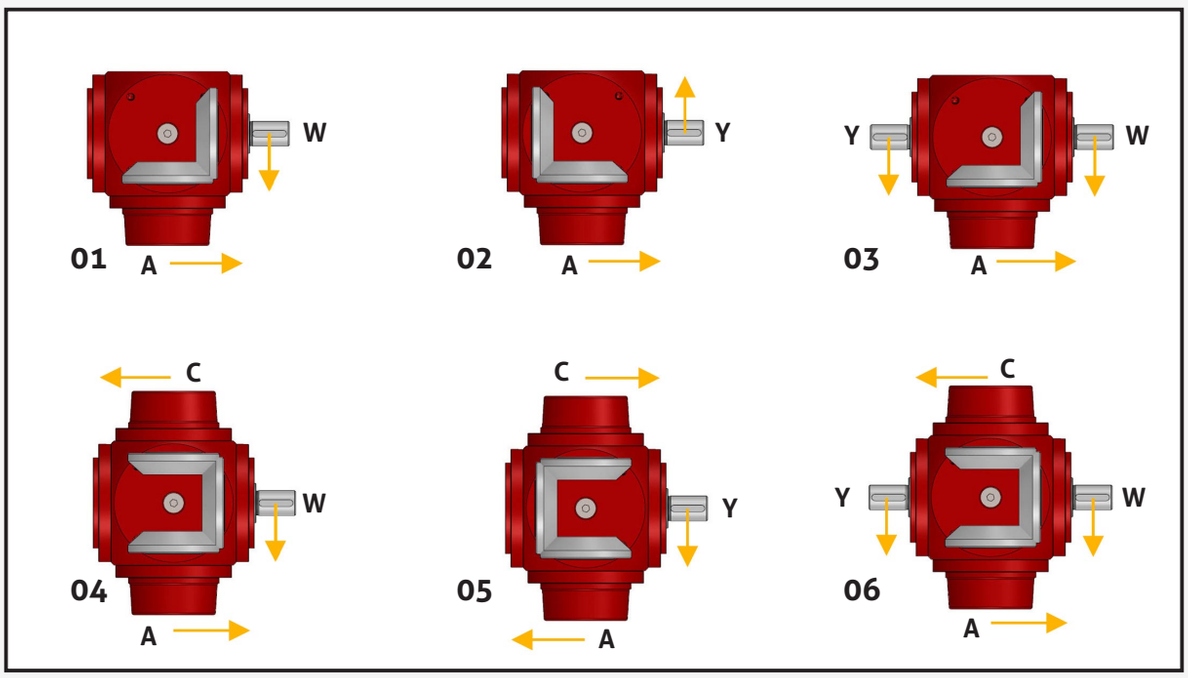

DIMENSIONAL DATA

RA C RANGE - Hollow input shaft with oversized output shaft

The C range is built to have at least one hollow shaft, with which the customer can couple their own shaft to the product. In this configuration, the input shaft is hollow with a key seat, while the output shaft is protruding and oversized.

The range is available for ratios 1:1 , 1.5:1 , 2:1

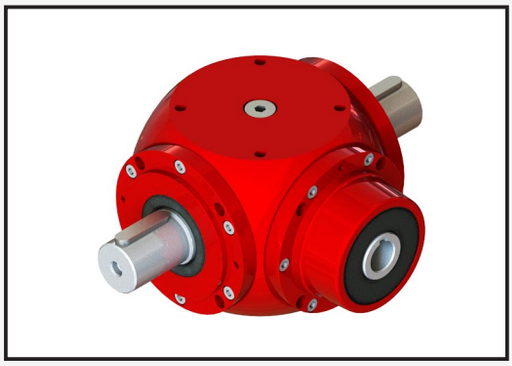

RA C RANGE - Hollow input shaft with oversized output shaft - GENERAL MEASUREMENTS

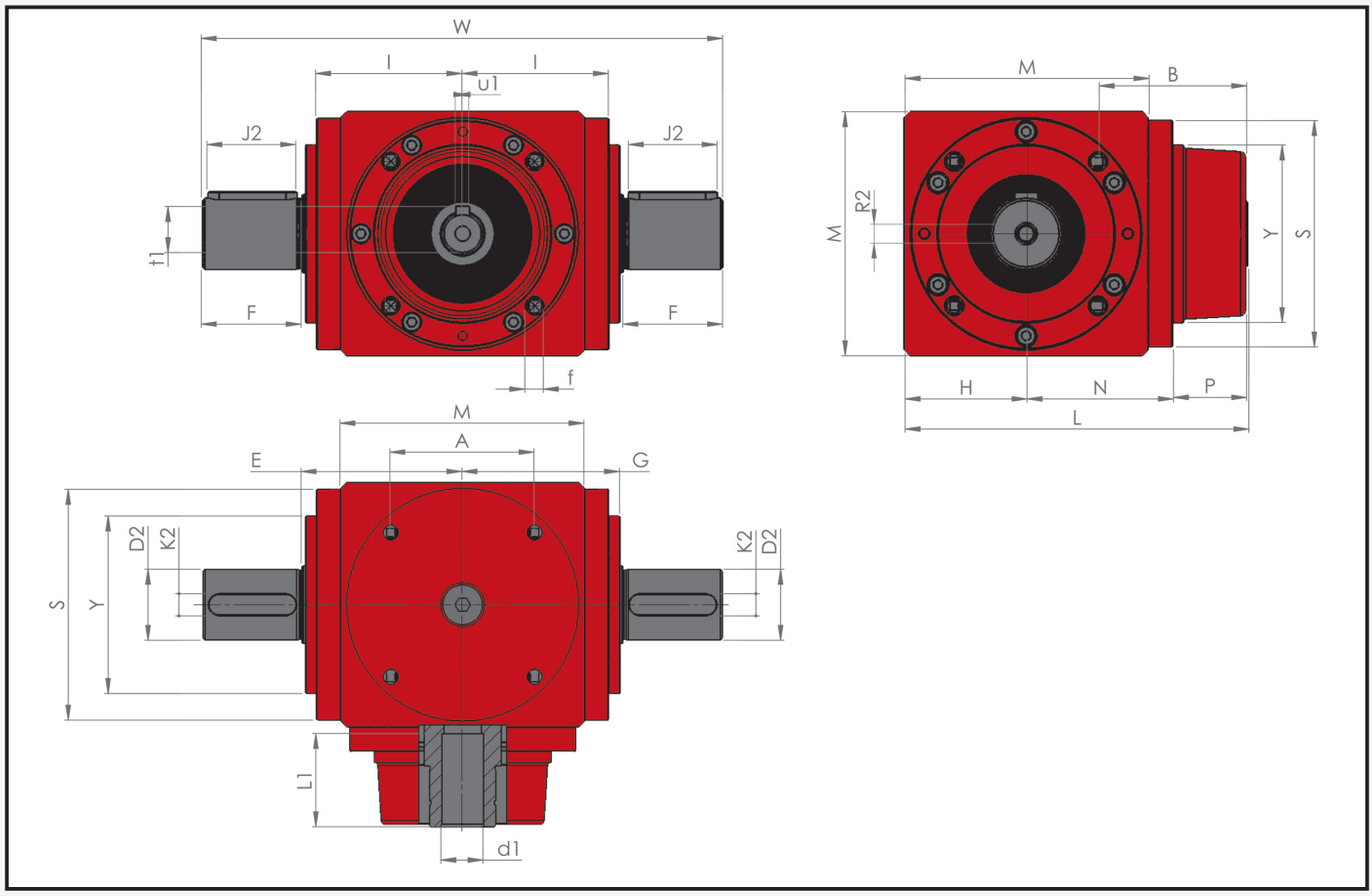

RA C RANGE - Hollow input shaft with oversized output shaft - GENERAL MEASUREMENTS																		
SIZE	A	B	E	G	H	I	f	M	N	P	Yj7	S	D2j6	F	J2	K2	R2	W
2005	48	48	52,5	51,5	40	48	M6	80	48	24	58	76	22	35	30	6	M8	215
2010	65	66,5	72,5	71	55	66	M8	110	66	33	80	104	32	45	40	10	M8	275
2020	82	86	92,5	91	70	85	M10	140	85	42	102	131	42	60	50	12	M10	344
2040	100	104	112	110	85	103	M12	170	103	51	124	158	55	85	70	16	M12	447
2080	124	126	138,5	135,5	105	125	M16	210	125	63	152	195	65	100	90	18	M12	545
2160	154	156,5	172,5	170	130	156	M16	260	156	77,5	190	243	75	120	110	20	M16	696

RA C RANGE - Hollow input shaft with oversized output shaft - GENERAL MEASUREMENTS

RA C RANGE - Hollow shafts with key - GENERAL MEASUREMENTS					
SIZE	d1H7	u1	t1	L1	L
2005	14	5	16,3	31	113
2010	19	6	21,8	41	155
2020	24	8	27,3	52	198
2040	38	10	41,3	82	240
2080	48	14	51,8	112	195
2160	55	16	59,3	112	366

RA C RANGE - Hollow input shaft with oversized output shaft - LAYOUT

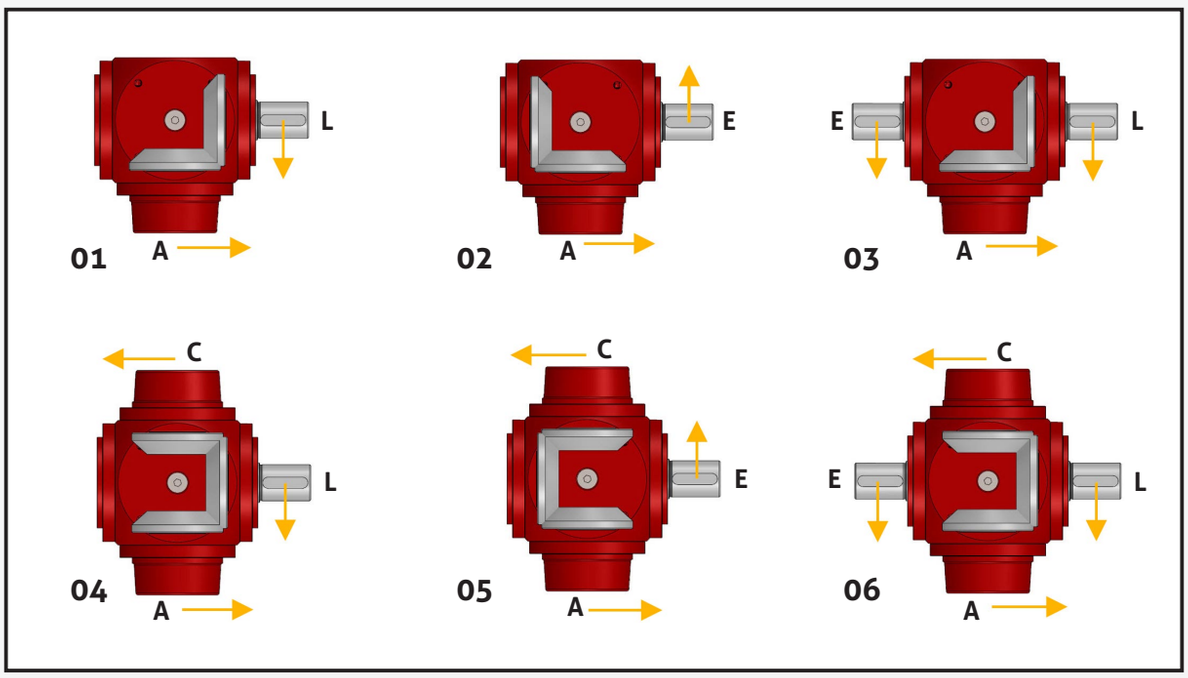

DIMENSIONAL DATA

RA V RANGE - Protruding shafts with speed multiplication ratio

The V range is built to make the bevel gearbox work as a speed multiplier. The output shaft will then rotate at a faster speed than the input shaft.
In this configuration the shafts are protruding both at the input and output to the gearbox. The shafts can be coupled by means of a special tab mounted on them.
The range is available for ratios 1:1.5 , 1:2

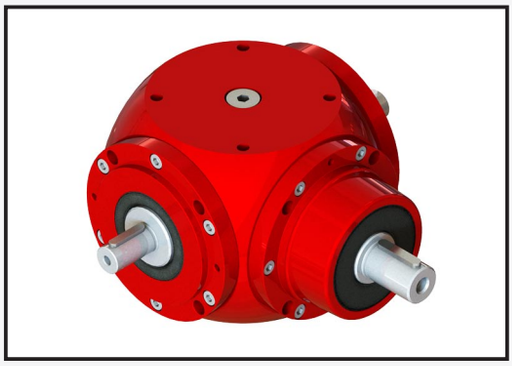

RA V RANGE - Protruding shafts with speed multiplication ratio - GENERAL MEASUREMENTS

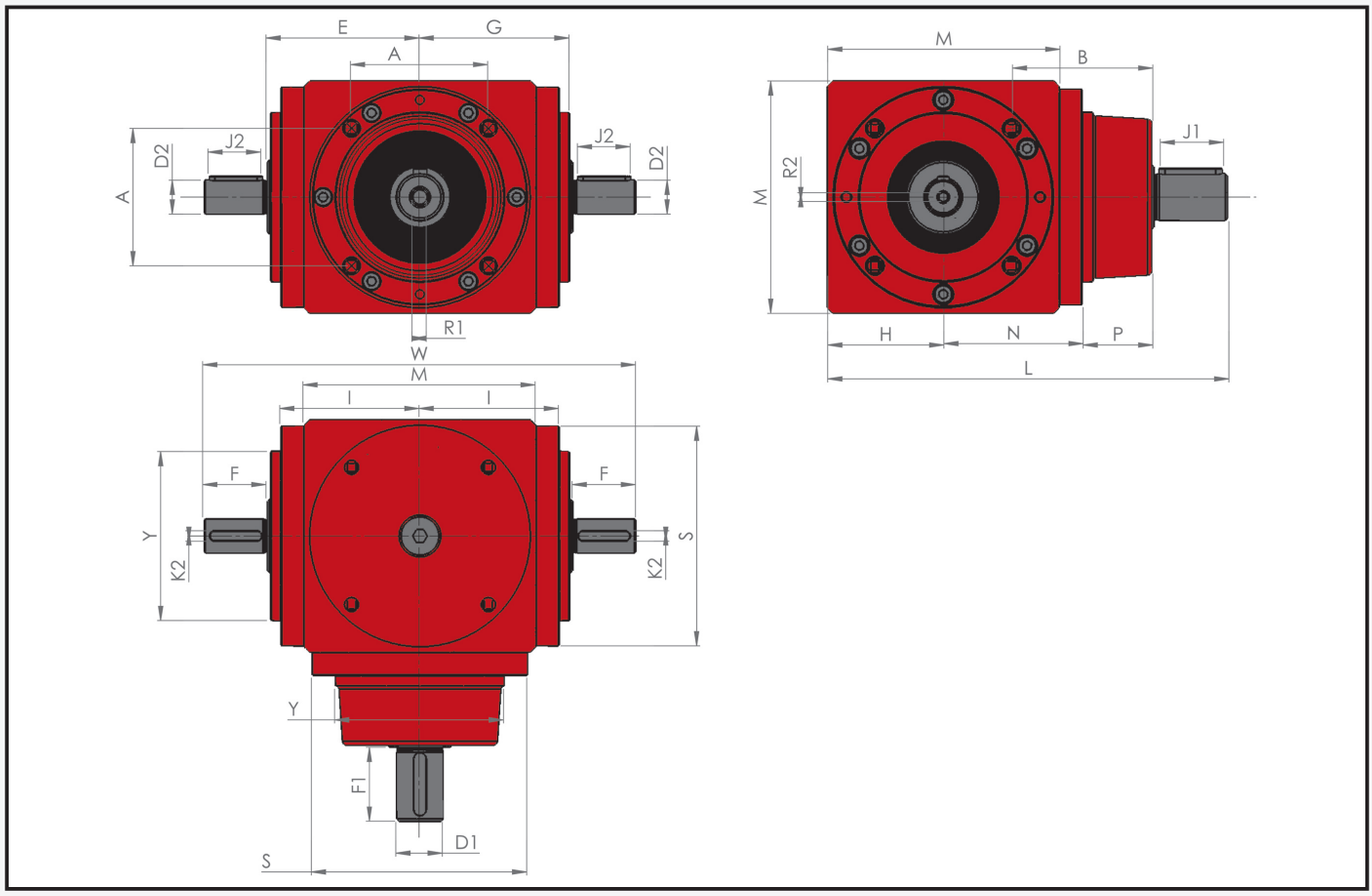

RA V RANGE - Protruding shafts with speed multiplication ratio - GENERAL MEASUREMENTS																		
SIZE	A	B	E	G	H	I	f	M	N	P	Yj7	S	D1j6	F1	J1	K1	R1	L
2005	48	48	52,5	51,5	40	48	M6	80	48	24	58	76	14	30	25	5	M5	143
2010	65	66,5	72,5	71	55	66	M8	110	66	33	80	104	22	35	30	6	M8	190
2020	82	86	92,5	91	70	85	M10	140	85	42	102	131	32	45	40	10	M8	243
2040	100	104	112	110	85	103	M12	170	103	51	124	158	42	60	50	12	M10	300
2080	124	126	138,5	135,5	105	125	M16	210	125	63	152	195	55	85	70	16	M12	380
2160	154	156,5	172,5	170	130	156	M16	260	156	77,5	190	243	65	100	90	18	M12	466
2320	192	216	228	215	165	197	M18	330	197	115	240	306	75	120	110	20	M16	600
2640	240	268	270	265	200	240	M22	400	240	148	300	375	90	150	140	25	M16	740

RA V RANGE - Protruding shafts with speed multiplication ratio
MEASUREMENTS FOR REDUCTION RATIOS

MEASUREMENTS FOR REDUCTION RATIOS						
0.5:1 / 0.65:1						
SIZE	D2j6	F	J2	K2	R2	W
2005	12	25	20	4	M4	155
2010	16	30	25	5	M5	205
2020	24	42	35	8	M8	269
2040	28	50	45	8	M8	324
2080	38	60	50	10	M10	397
2160	50	80	70	14	M10	505
2320	55	90	70	16	M12	636
2640	65	130	90	18	M12	800

RA V RANGE - Protruding shafts with speed multiplication ratio - LAYOUT

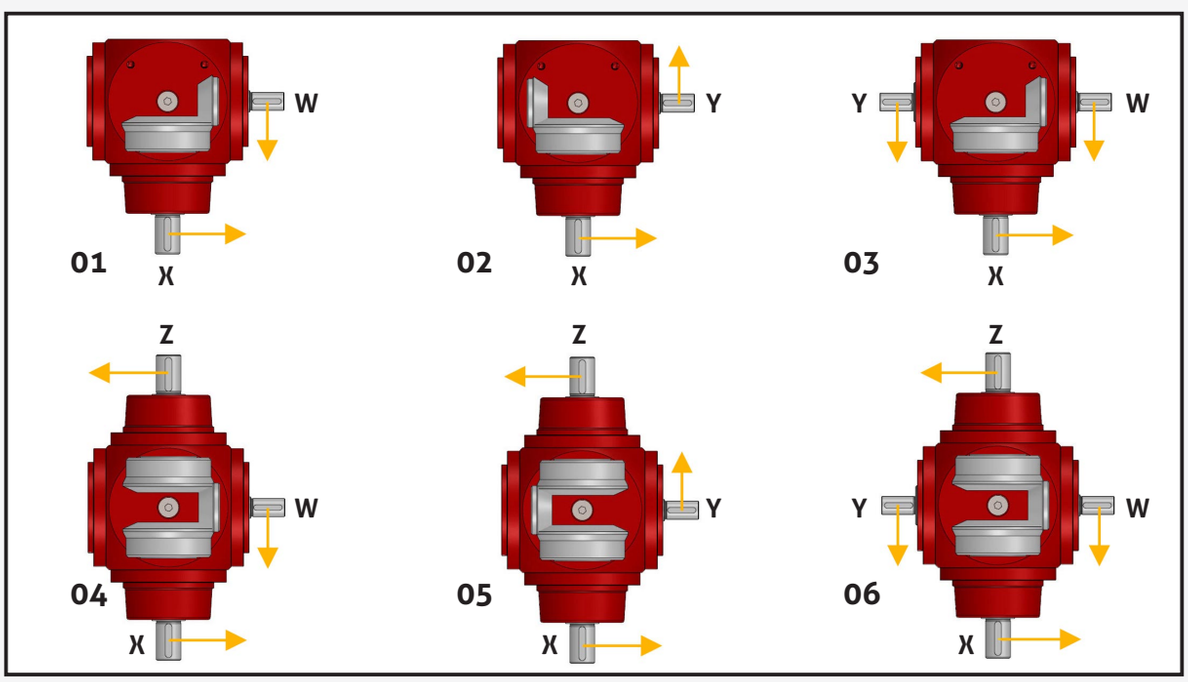

DIMENSIONAL DATA

RA V RANGE - Hollow input shaft with speed multiplication ratio

The V range is built to make the bevel gearbox work as a speed multiplier. The output shaft will then rotate at a faster speed than the input shaft.
In this configuration, the input shaft is hollow while the output shaft is protruding.
The range is available for ratios 1:1.5 , 1:2

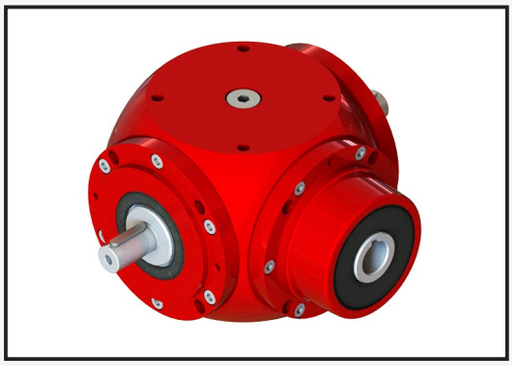

RA V RANGE - Hollow input shaft with speed multiplication ratio - GENERAL MEASUREMENTS

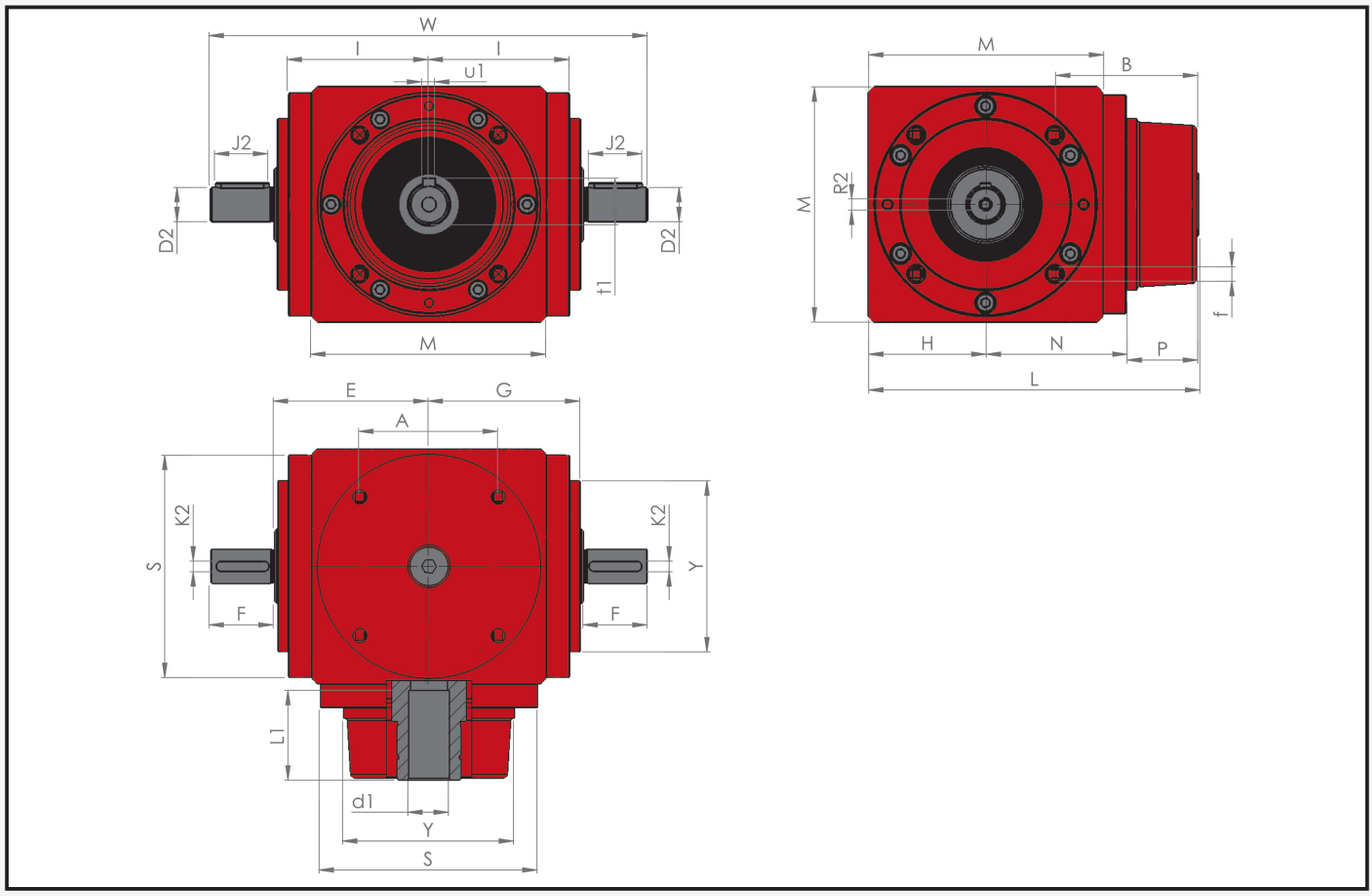

RA V RANGE - Hollow input shaft with speed multiplication ratio - GENERAL MEASUREMENTS												
SIZE	A	B	E	G	H	I	f	M	N	P	Yj7	S
2005	48	48	52,5	51,5	40	48	M6	80	48	24	58	76
2010	65	66,5	72,5	71	55	66	M8	110	66	33	80	104
2020	82	86	92,5	91	70	85	M10	140	85	42	102	131
2040	100	104	112	110	85	103	M12	170	103	51	124	158
2080	124	126	138,5	135,5	105	125	M16	210	125	63	152	195
2160	154	156,5	172,5	170	130	156	M16	260	156	77,5	190	243

RA V RANGE - Hollow input shaft with speed multiplication ratio
MEASUREMENTS FOR REDUCTION RATIOS

MEASUREMENTS FOR REDUCTION RATIOS						
0.5:1 / 0.65:1						
SIZE	D2j6	F	J2	K2	R2	W
2005	12	25	20	4	M4	155
2010	16	30	25	5	M5	205
2020	24	42	35	8	M8	269
2040	28	50	45	8	M8	324
2080	38	60	50	10	M10	397
2160	50	80	70	14	M10	505

RA V RANGE - Hollow input shaft with speed multiplication ratio - LAYOUT

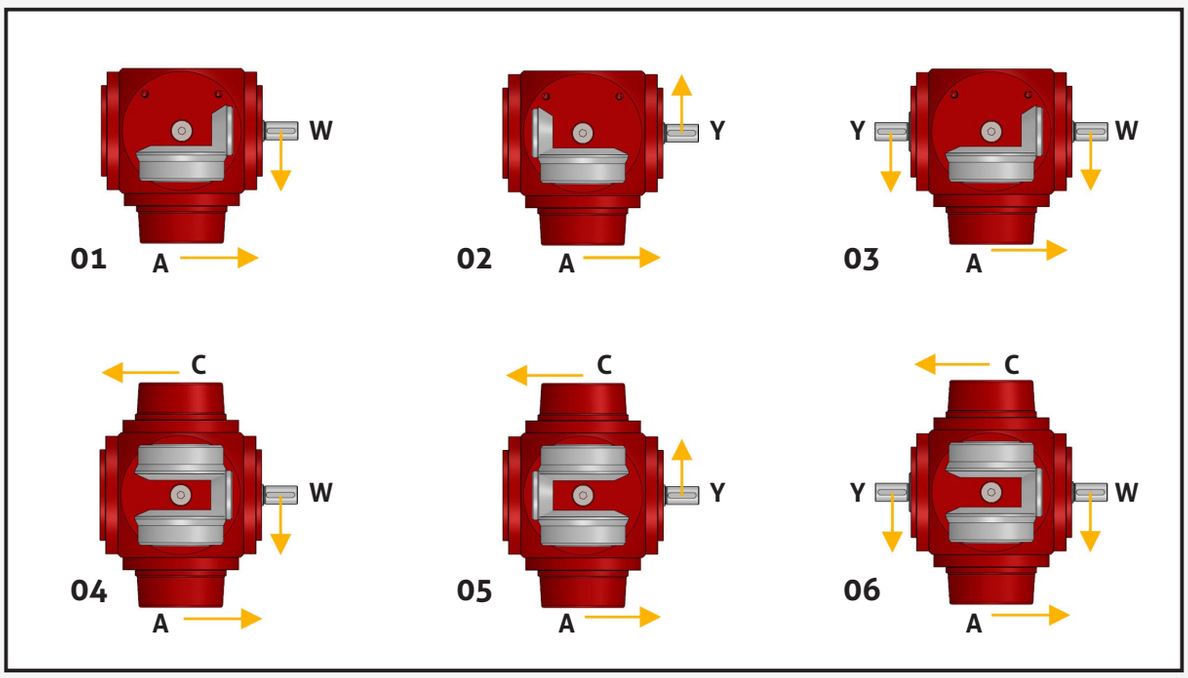

DIMENSIONAL DATA

RA X RANGE - Tridirectional

The tridirectional X range is built for particular application needs in which it is necessary to transmit the motion between several orthogonal axles. As standard, the range consists of shafts protruding in all directions. Configurations with shafts of different nature such as hollow shafts can be built on request. We recommend that you contact our technical department to check that the request is feasible.

The directions of rotation and the working position are indicated as per the arrangement table. It is not possible to make the bevel gearbox with a 1:1 reduction ratio.
The range is available for ratios from 1.5:1 up to 5:1.

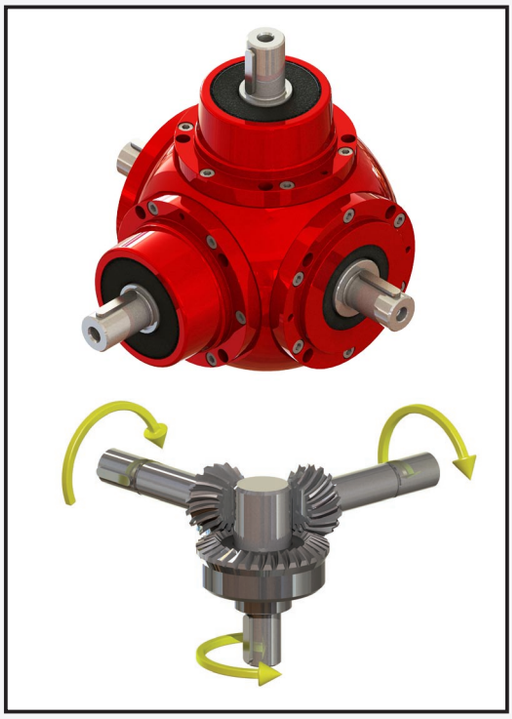

RA X RANGE - Tridirectional - GENERAL MEASUREMENTS

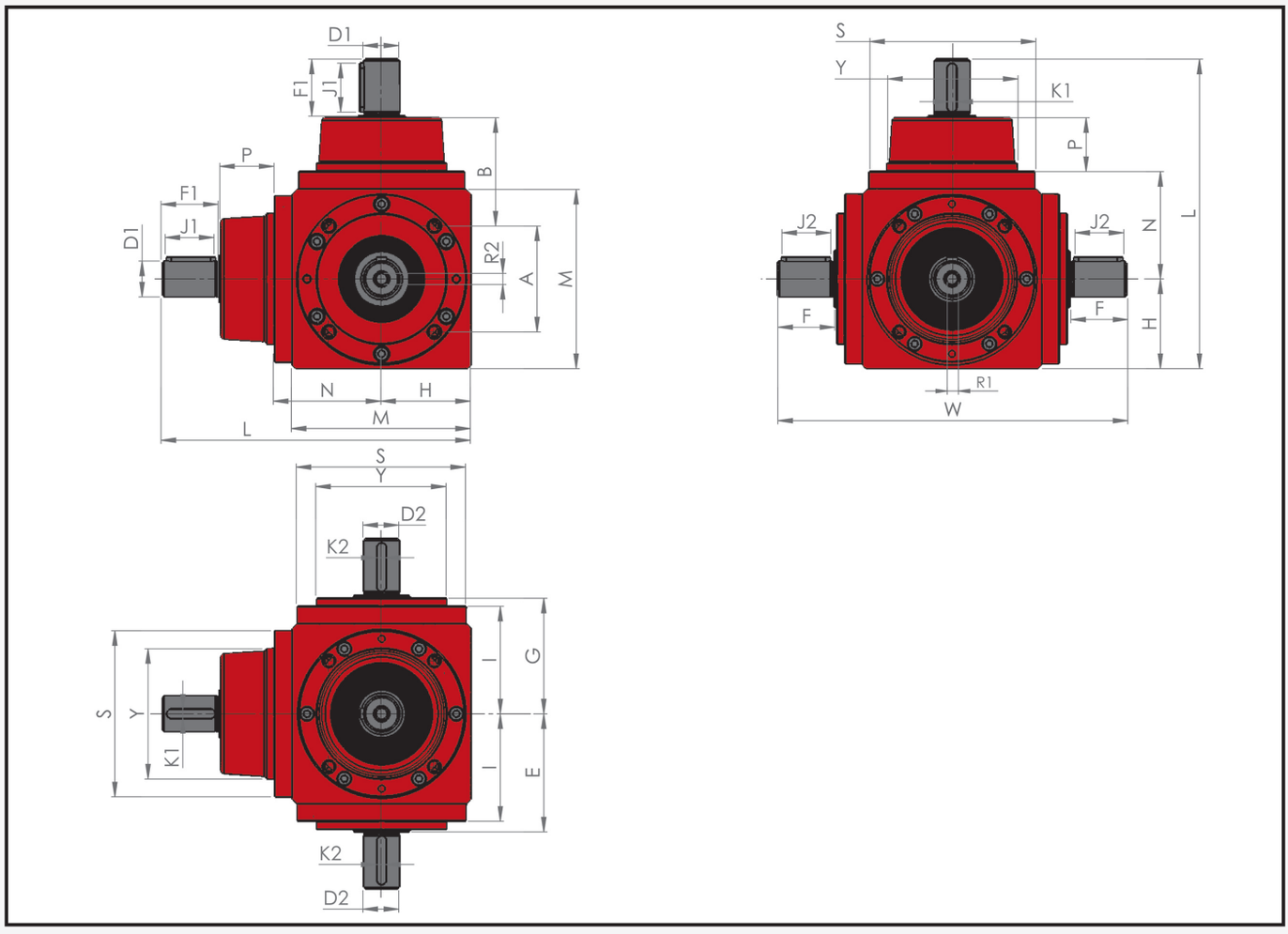

DIMENSIONAL DATA

RA X RANGE - Tridirectional - GENERAL MEASUREMENTS

RA X RANGE - Tridirectional - GENERAL MEASUREMENTS																		
TAGLIA	A	B	E	G	H	I	f	M	N	P	Yj7	S	D2j6	F	J2	K2	R2	W
2005	48	48	52,5	51,5	40	48	M6	80	48	24	58	76	14	30	25	5	M5	165
2010	65	66,5	72,5	71	55	66	M8	110	66	33	80	104	22	35	30	6	M8	215
2020	82	86	92,5	91	70	85	M10	140	85	42	102	131	32	45	40	10	M8	275
2040	100	104	112	110	85	103	M12	170	103	51	124	158	42	60	50	12	M10	344
2080	124	126	138,5	135,5	105	125	M16	210	125	63	152	195	55	85	70	16	M12	447
2160	154	156,5	172,5	170	130	156	M16	260	156	77,5	190	243	65	100	90	18	M12	545
2320	192	216	228	215	165	197	M18	330	197	115	240	306	75	120	110	20	M16	696
2640	240	268	270	265	200	240	M22	400	240	148	300	375	90	150	140	25	M16	840

RA X RANGE - Tridirectional - MEASUREMENTS FOR REDUCTION RATIOS												
	1:1 / 1.5:1 / 2:1						3:1					
SIZE	D1j6	F1	J1	K1	R1	L	D1j6	F1	J1	K1	R1	L
2005	14	30	25	5	M5	143	12	25	20	4	M4	138
2010	22	35	30	6	M8	190	22	35	30	6	M8	190
2020	32	45	40	10	M8	243	32	45	40	10	M8	243
2040	42	60	50	12	M10	300	36	55	50	10	M10	295
2080	55	85	70	16	M12	380	38	65	60	10	M10	360
2160	65	100	90	18	M12	466	55	85	70	16	M12	451
2320	75	120	110	20	M16	600	55	85	70	16	M12	565
2640	90	150	140	25	M16	740	75	120	110	20	M16	710

RA X RANGE - Tridirectional - MEASUREMENTS FOR REDUCTION RATIOS												
	4:1						5:1					
SIZE	D1j6	F1	J1	K1	R1	L	D1j6	F1	J1	K1	R1	L
2005	9	20	15	3	M4	133	X	X	X	X	X	X
2010	16	30	25	5	M5	185	12	22	20	4	M4	177
2020	20	32	25	6	M5	230	16	30	25	6	M5	228
2040	26	45	40	8	M8	285	22	40	35	8	M8	280
2080	32	45	40	10	M8	340	26	45	40	8	M8	340
2160	42	70	50	12	M10	436	32	58	50	10	M8	424
2320	50	75	70	15	M10	555	42	70	50	12	M10	550
2640	60	95	80	18	M12	685	55	85	70	16	M12	675

RA X RANGE - Tridirectional - LAYOUTS

NOTE: the plane shown represents the ground reference according to which the working position is defined

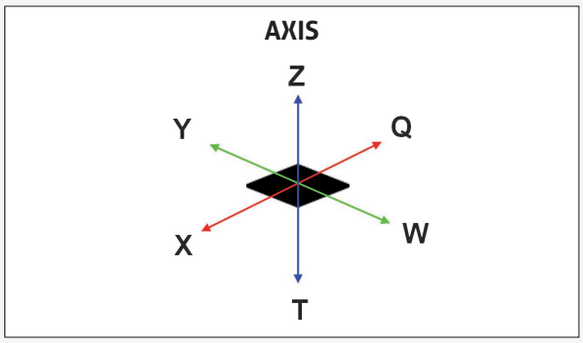

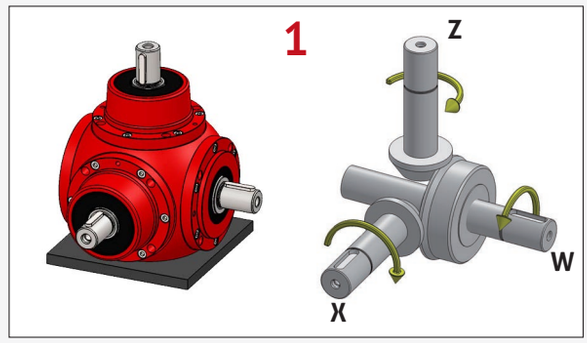

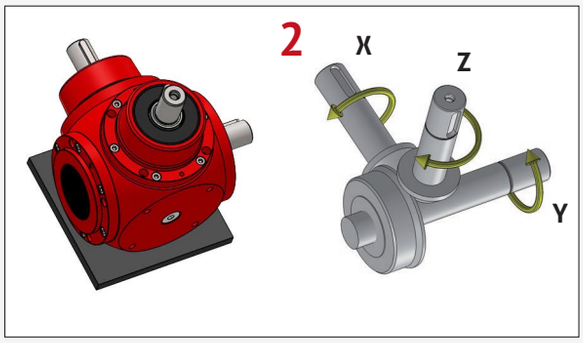

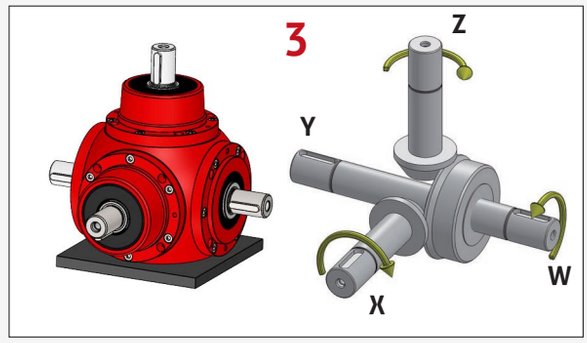

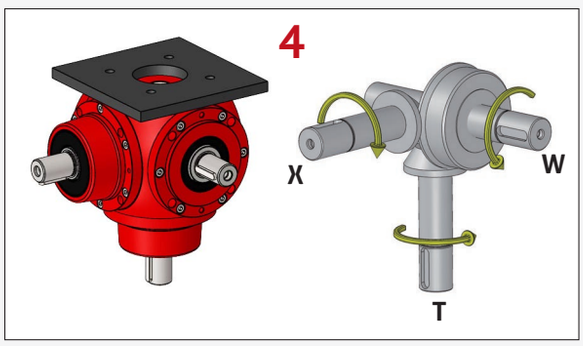

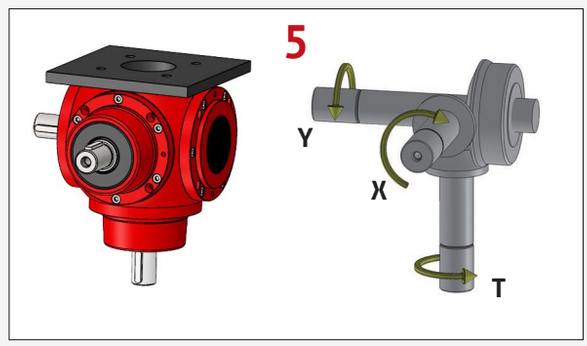

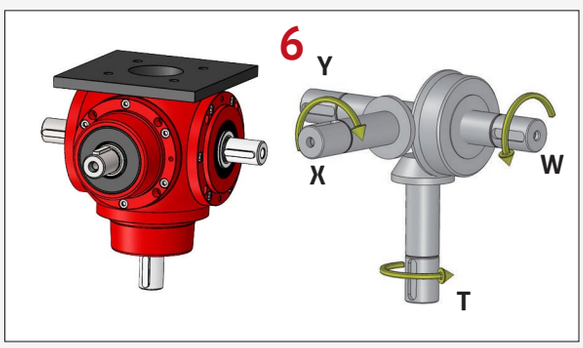

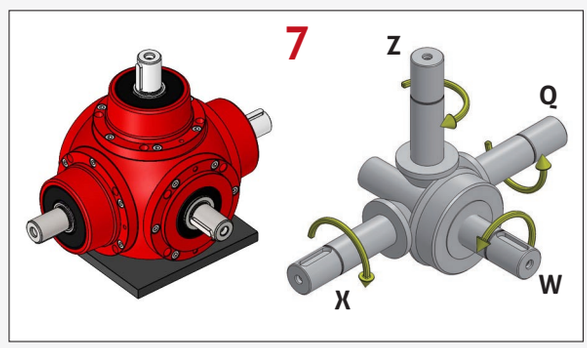

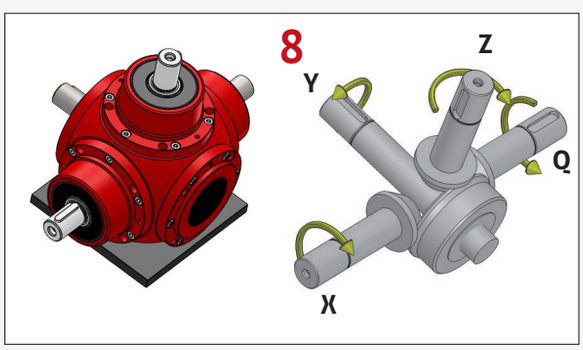

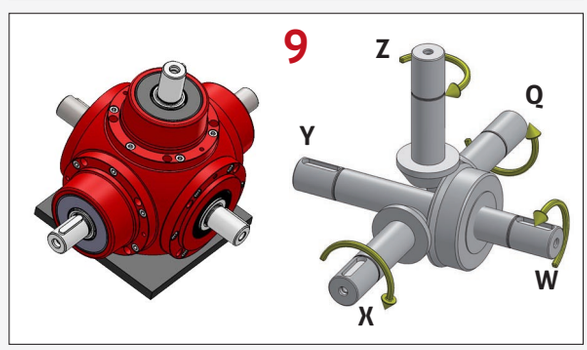

RA X RANGE - Tridirectional - LAYOUTS

NOTE: the plane shown represents the ground reference according to which the working position is defined

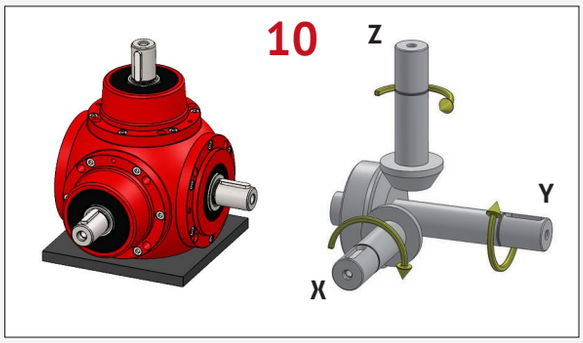

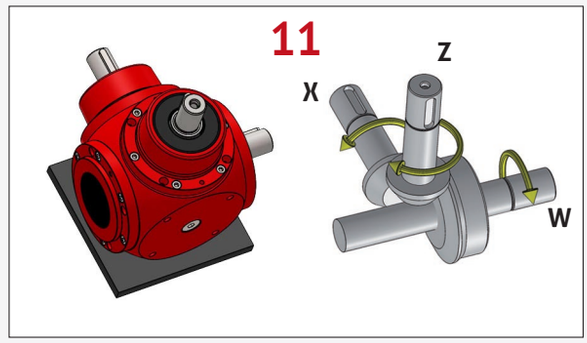

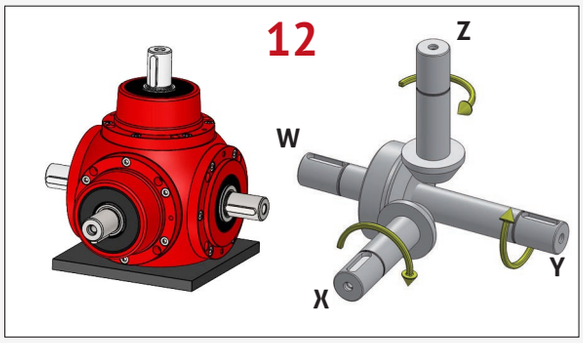

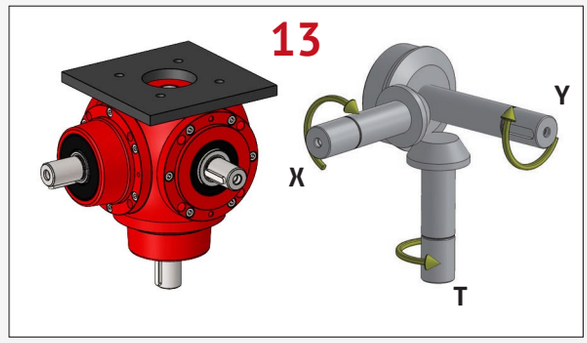

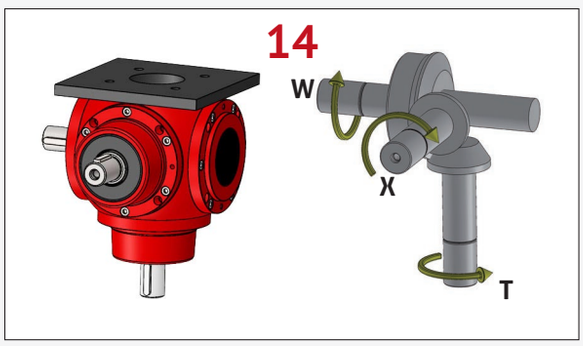

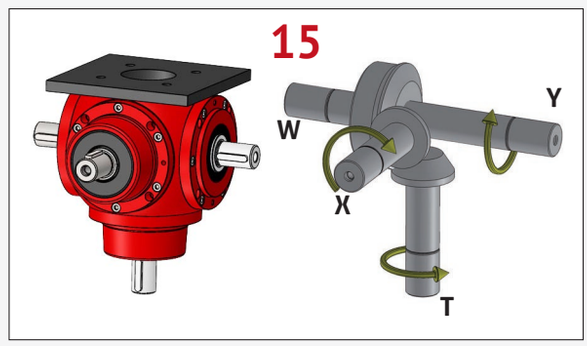

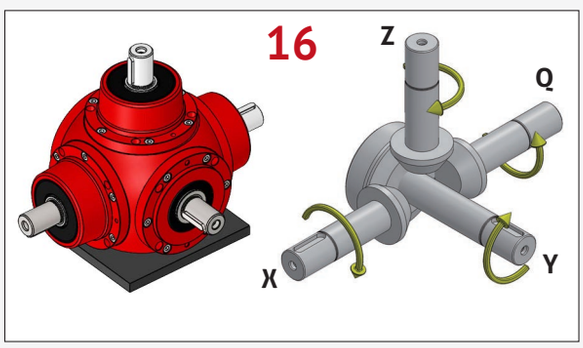

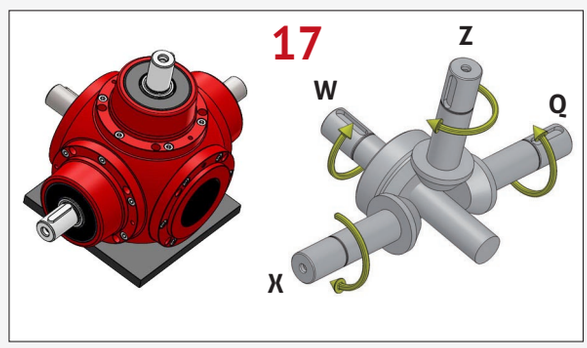

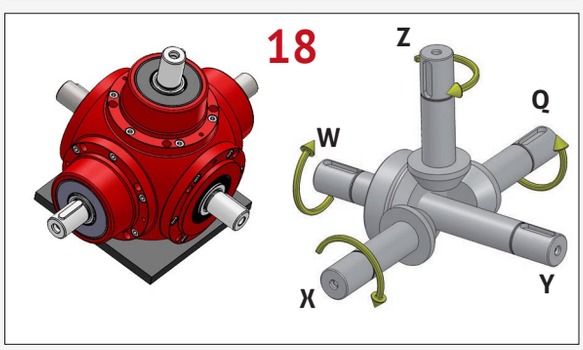

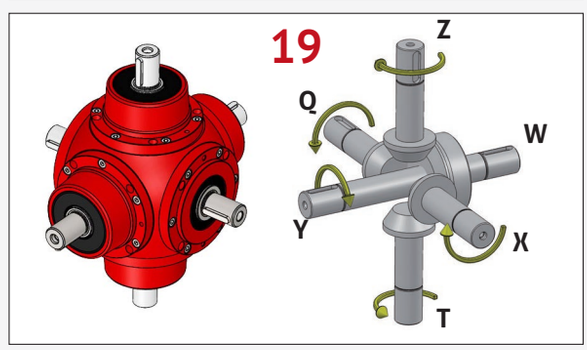

DIMENSIONAL DATA

RA H RANGE - Orthogonal reversing gear

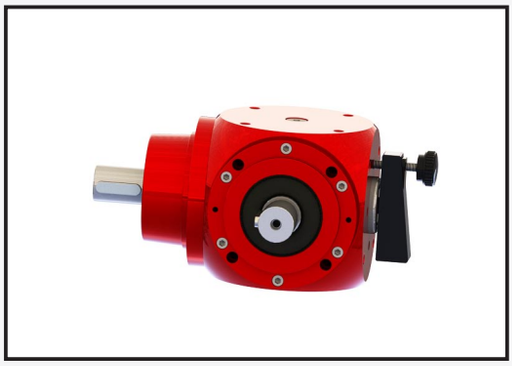

The H range is built to make the N range gearbox an orthogonal inverter. By rotating the special crank made of phenolic based (PF) Duroplast or polyamide based (PA) technopolymer, it is possible to engage, disengage or reverse (depending on the configuration) the motion of the input shaft to the output shaft.
In the 01,02,03 arrangements, with the crank it is possible to engage/disengage the motion between the input shaft and the output shaft. In the 04,05,06 arrangements, however, the crank can be used to reverse the direction of rotation of the output shaft.
The inversion or disengagement of the motion by turning the crank must always take place when both the gearbox shafts are stationary and without torsional load. Once the manoeuvre has been carried out, it is advisable to lock the crank in the desired position by screwing it into the appropriate seats on the casing.
The range is available for ratios from 1:1 up to 2:1.

RA H RANGE - Orthogonal reversing gear - GENERAL MEASUREMENTS

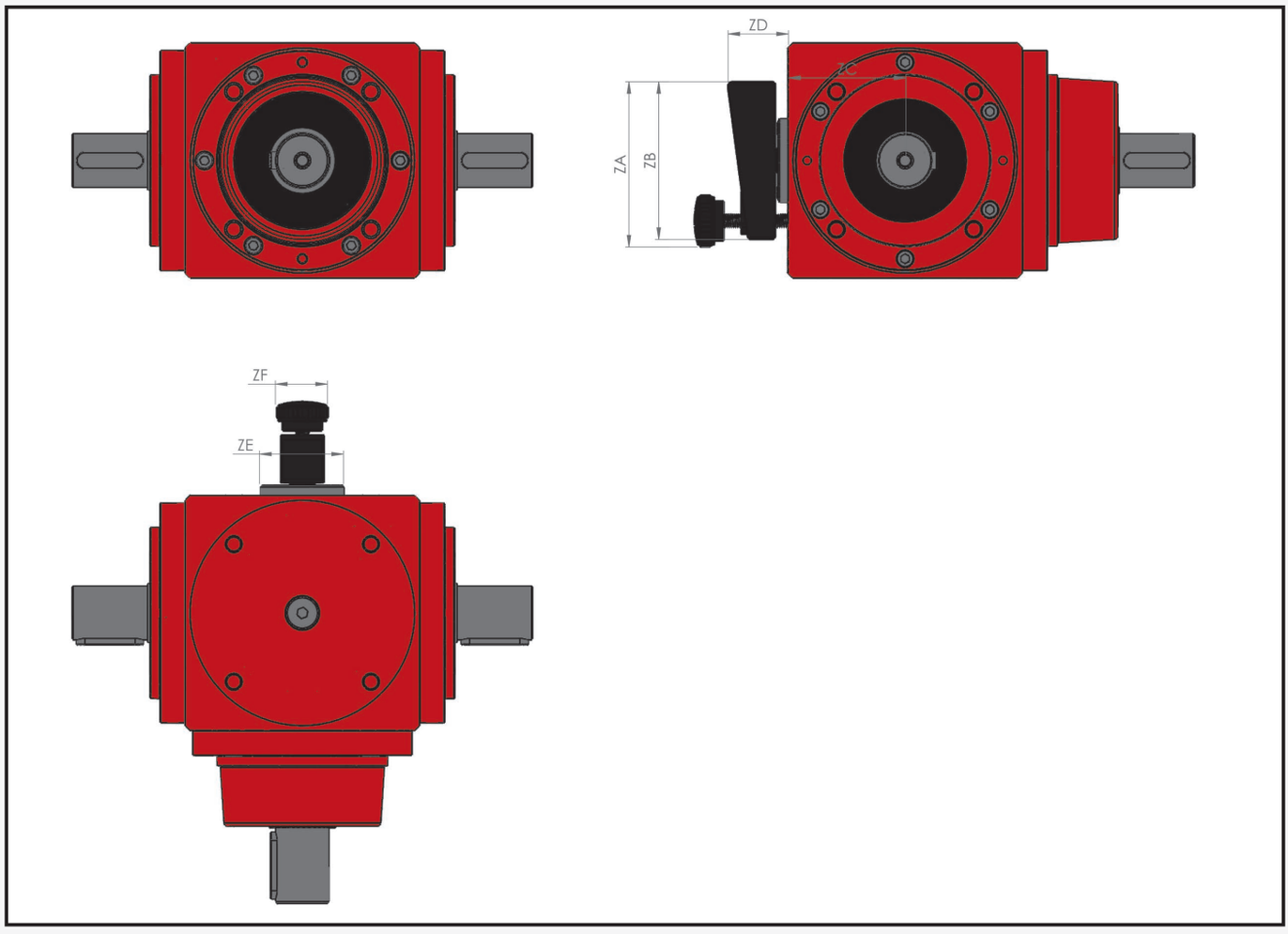

DIMENSIONAL DATA

RA H RANGE - Orthogonal reversing gear - GENERAL MEASUREMENTS

RA H RANGE - Orthogonal reversing gear - GENERAL MEASUREMENTS						
SIZE	ZA	ZB	ZC	ZD	ZE	ZF
2005	66	65	42	30	36	22
2010	98	94	56	36	50	31
2020	98	94	56	36	50	31
2040	124	110	70	41	55	50
2080	124	110	70	41	55	50
2160	124	110	70	41	55	50

RA H RANGE - Orthogonal reversing gear - LAYOUT

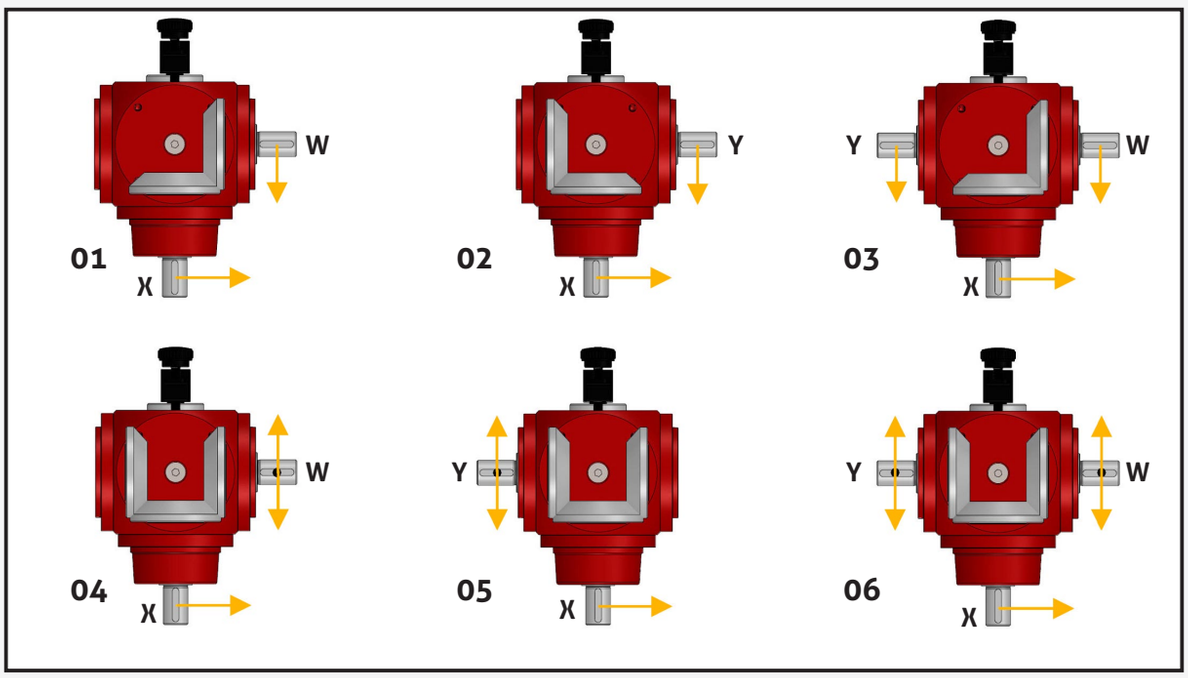

DIMENSIONAL DATA

RA K RANGE - Coaxial reversing gear

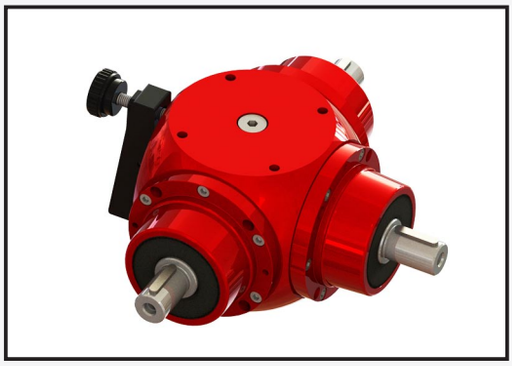

The K range is built to make the D range gearbox a Coaxial reversing gear. By rotating the special crank made of phenolic based (PF) Duroplast or polyamide based (PA) technopolymer, the motion of the right output shaft W can be made in line or not with the left output shaft Y.
The output shaft Y, on the other hand, will always be coupled in the same direction of rotation with respect to the X axle. The inversion of the motion by turning the crank must always take place when both the gearbox shafts are stationary and without torsional load.
Once the manoeuvre has been carried out, it is advisable to lock the crank in the desired position by screwing it into the appropriate seats on the casing.
The range is available for ratios from 1:1 up to 2:1

RA K RANGE - Coaxial reversing gear - GENERAL MEASUREMENTS

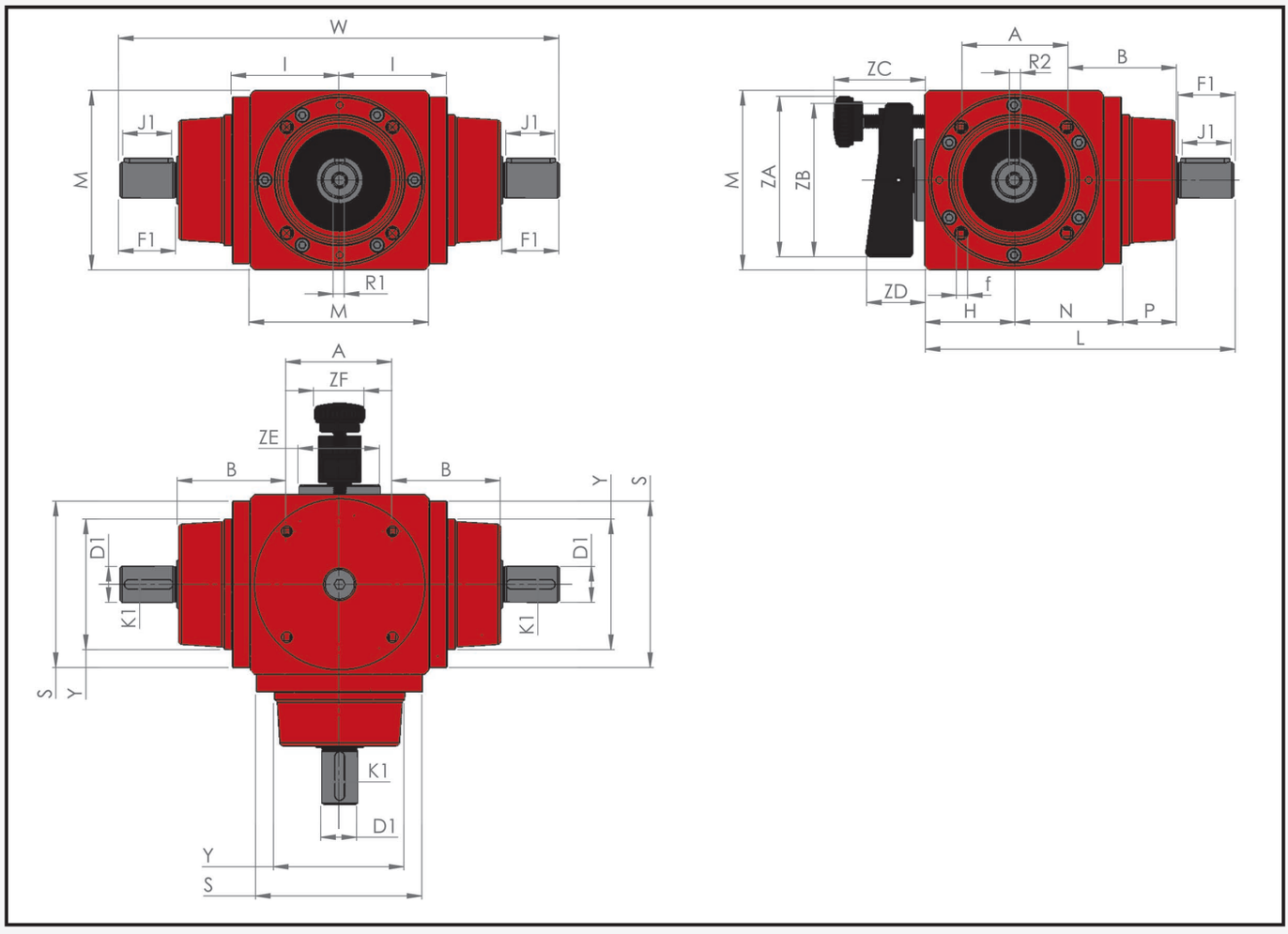

DIMENSIONAL DATA

RA K RANGE - Coaxial reversing gear - GENERAL MEASUREMENTS

RA K RANGE - Coaxial reversing gear - GENERAL MEASUREMENTS												
SIZE	A	B	E	G	H	I	f	M	N	P	Yj7	S
2005	48	48	52,5	51,5	40	48	M6	80	48	24	58	76
2010	65	66,5	72,5	71	55	66	M8	110	66	33	80	104
2020	82	86	92,5	91	70	85	M10	140	85	42	102	131
2040	100	104	112	110	85	103	M12	170	103	51	124	158
2080	124	126	138,5	135,5	105	125	M16	210	125	63	152	195
2160	154	156,5	172,5	170	130	156	M16	260	156	77,5	190	243

MEASUREMENTS FOR REDUCTION RATIOS - RANGE K							
	1:1 / 1.5:1 / 2:1						
SIZE	D1j6	F1	J1	K1	R1	L	W
2005	14	30	25	5	M5	143	206
2010	22	35	30	6	M8	190	270
2020	32	45	40	10	M8	243	346
2040	42	60	50	12	M10	300	430
2080	55	85	70	16	M12	380	550
2160	65	100	90	18	M12	466	672

MEASUREMENTS FOR REDUCTION RATIOS - RANGE K						
SIZE	ZA	ZB	ZC	ZD	ZE	ZF
2005	66	65	42	30	36	22
2010	98	94	56	36	50	31
2020	98	94	56	36	50	31
2040	124	110	70	41	55	50
2080	124	110	70	41	55	50
2160	124	110	70	41	55	50

RA K RANGE - Coaxial reversing gear - LAYOUT

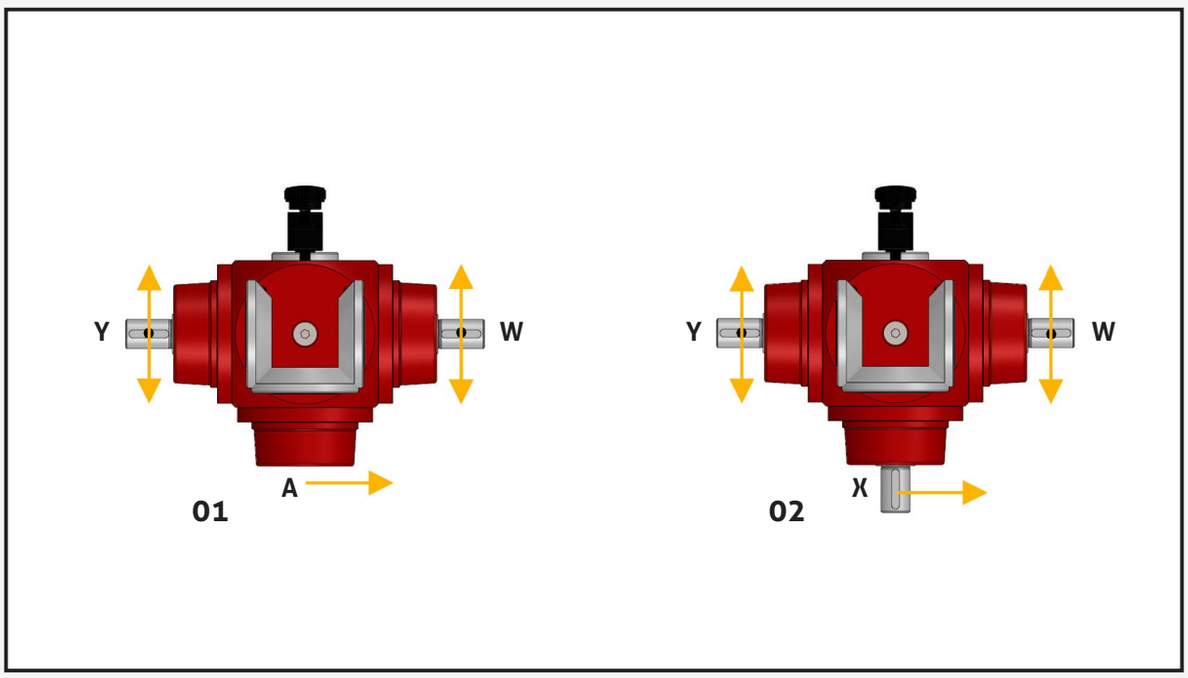

MOTOR CONNECTION ARRANGEMENT (P.A.M.)

Motor Connection Arrangement (P.A.M.)

The PAM Motor Connection Arrangement offers the possibility of connecting the bevel gearbox input to the motor through the use of the main standard flanges B5 and B14 generally used on electric motors.
The gearbox with PAM input can also be supplied complete with motor upon request.

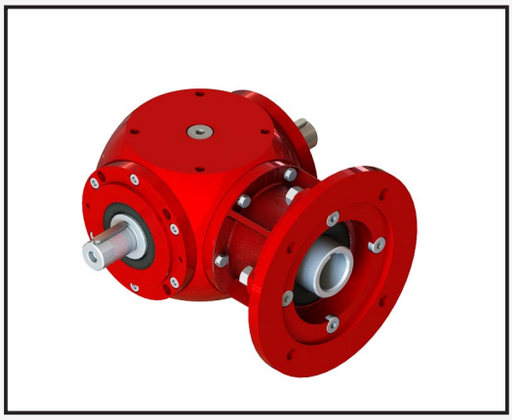

GENERAL MEASUREMENTS PAM			
SIZE	S	Q	N
2005	76	79	53
2010	104	108	69
2020	131	136	84
2040	158	165	103

GENERAL MEASUREMENTS PAM			
SIZE	S	Q	N
2080	195	205	123
2160	243	252	156
2320	306	306	202
2640	375	375	240

Motor Connection Arrangement (P.A.M.) - GENERAL MEASUREMENTS

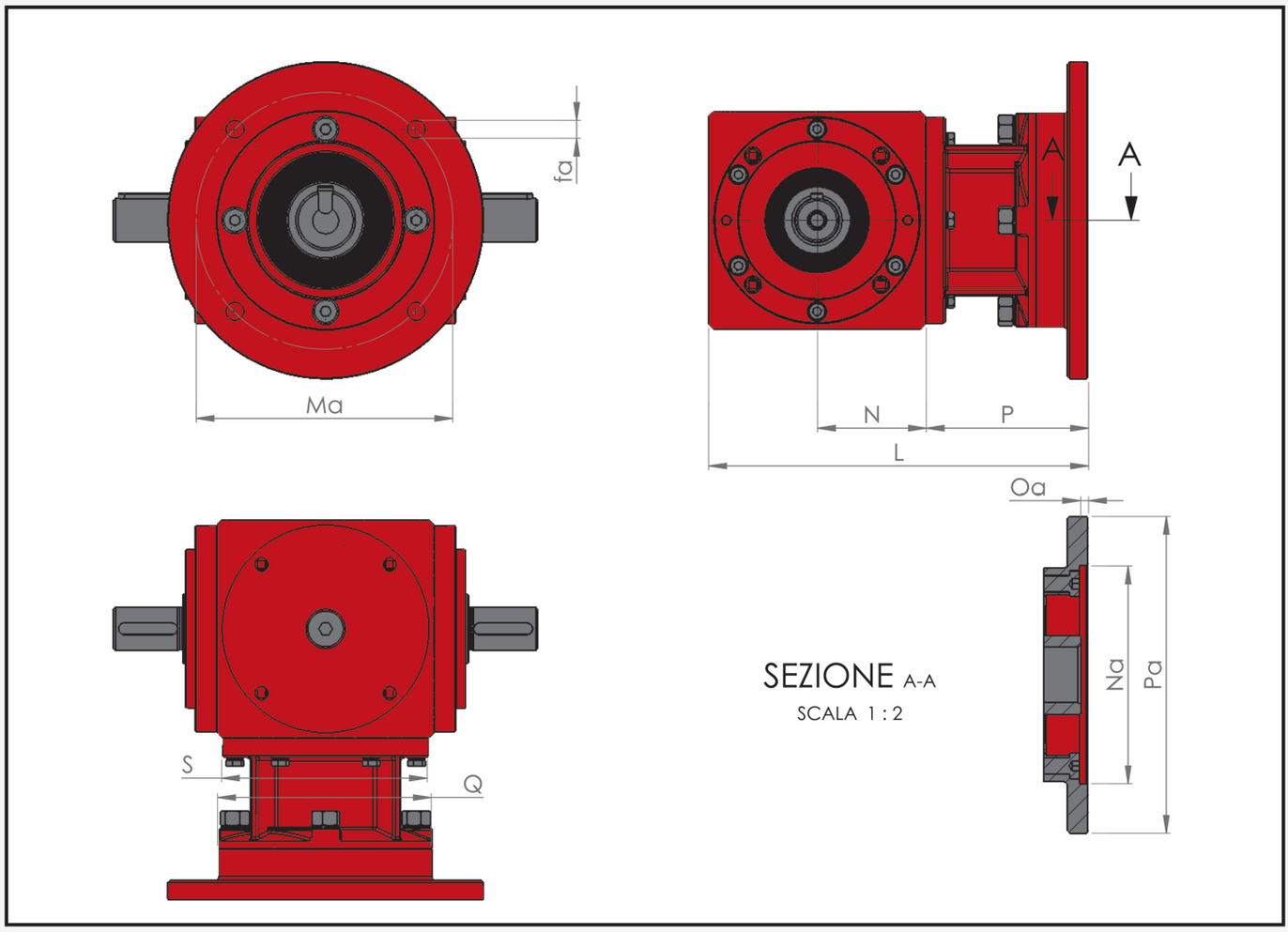

P.A.M. CODING EXAMPLE

It should be noted that the wording "PAM" does not identify a RANGE, but the possibility of mounting a component capable of adapting to the main motor flanges on the market. For this reason, the PAM arrangement can be mounted on almost all gearbox ranges and configurations, therefore, it will have a different type of coding.

Using the coding example given on page 9, for a **NON PAM** bevel gearbox the code was:

RA2010 - N - 2 - XYW - 03 - J - VT - OA

If this bevel gearbox is **designed for a PAM connection** , the new code will be:

RA2010 - N - 2 - AYW - 03 - PAM71B5 - J - VT - OA

By looking at the two codes we immediately notice that the arrangement of the shafts has changed: since a PAM flange is coupled to **a PAM shaft which is always hollow,** the input shaft will always be called hollow, therefore "A". In the example given, the size of the flange and the hollow shaft are described by the text "71B5" identifiable from the following table.

GENERAL FLANGE MEASUREMENTS								
MOTOR SIZE (shaft axis height)	FLANGE TYPE	Pa	Ma	Na	fa	Oa	MOTOR SHAFT	
							DIAMETER	LENGHT
56	B5	120	100	80	6,6	3	9	20
63	B5	140	115	95	9,5	3	11	23
71	B5	160	130	110	9,5	3,5	14	30
80	B5	200	165	130	11,5	3,5	19	40
90	B5	200	165	130	11,5	3,5	24	50
100-112	B5	250	215	180	14,5	4	28	60
132	B5	300	265	130	14,5	4	38	60
160	B5	350	300	250	18,5	5	42	110
180	B5	350	300	250	18,5	5	48	110
200	B5	400	350	300	18,5	5	55	110
225	B5	450	400	300	18,5	5	60	140
250	B5	550	500	450	18,5	5	65	140
280	B5	550	500	450	18,5	5	75	140
315	B5	660	600	550	24	6	80	140
355	B5	800	740	680	25	6	100	210
400	B5	1000	940	880	25	6	110	210
56	B14	80	65	60	M5	2,5	9	20
63	B14	90	75	60	M5	2,5	11	23
71	B14	105	85	70	M6	2,5	14	30
80	B14	120	100	80	M6	3	19	40
90	B14	140	115	95	M8	3	24	50
100-112	B14	160	130	110	M8	3,5	28	60

GENERAL MEASUREMENTS			MOTOR SIZE WITH FLANGES	
SIZE	L	P	B5	B14
2005	138	58	56 / 63 / 71	56 / 63 / 71
	147	67	80 / 90	80 / 90
2010	182	72	56 / 63 / 71 / 80 / 90	56 / 63 / 71 / 80 / 90
	192	82	100 / 112	100 / 112
2020	238	98	63 / 71 / 80 / 90 / 100 / 112	63 / 71 / 80 / 90 / 100 / 112
	250	110	132	132
2040	292	122	71 / 80 / 90 / 100 / 112 / 132	71 / 80 / 90 / 100 / 112
	320	150	160 / 180	X
2080	360	150	80 / 90 / 100 / 112 / 132	80 / 90 / 100 / 112
	390	180	160 / 180 / 200	X
2160	440	180	132 / 160 / 180 / 200 / 225/ 250 / 280	X
2320	545	215	160 / 180 / 200 / 225 / 250 / 280 / 315	X
2640	640	240	200 / 225 / 250 / 280 / 315 / 355 / 400	X

OUTPUT GROOVED HOLLOW SHAFTS

All standard gearboxes are supplied with slots and keys with dimensions according to the UNI6604-69 standard.

If elements are not to be connected by keyway coupling but by means of splined shafts, Marzorati produces various types of grooves to order. To verify the feasibility of a groove, contact our technical department. As standard, Marzorati produces splined shafts according to UNI8953 with dimensions as shown in the table below.

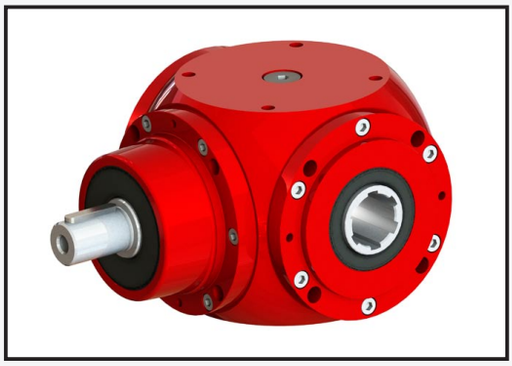

OUTPUT GROOVED HOLLOW SHAFTS

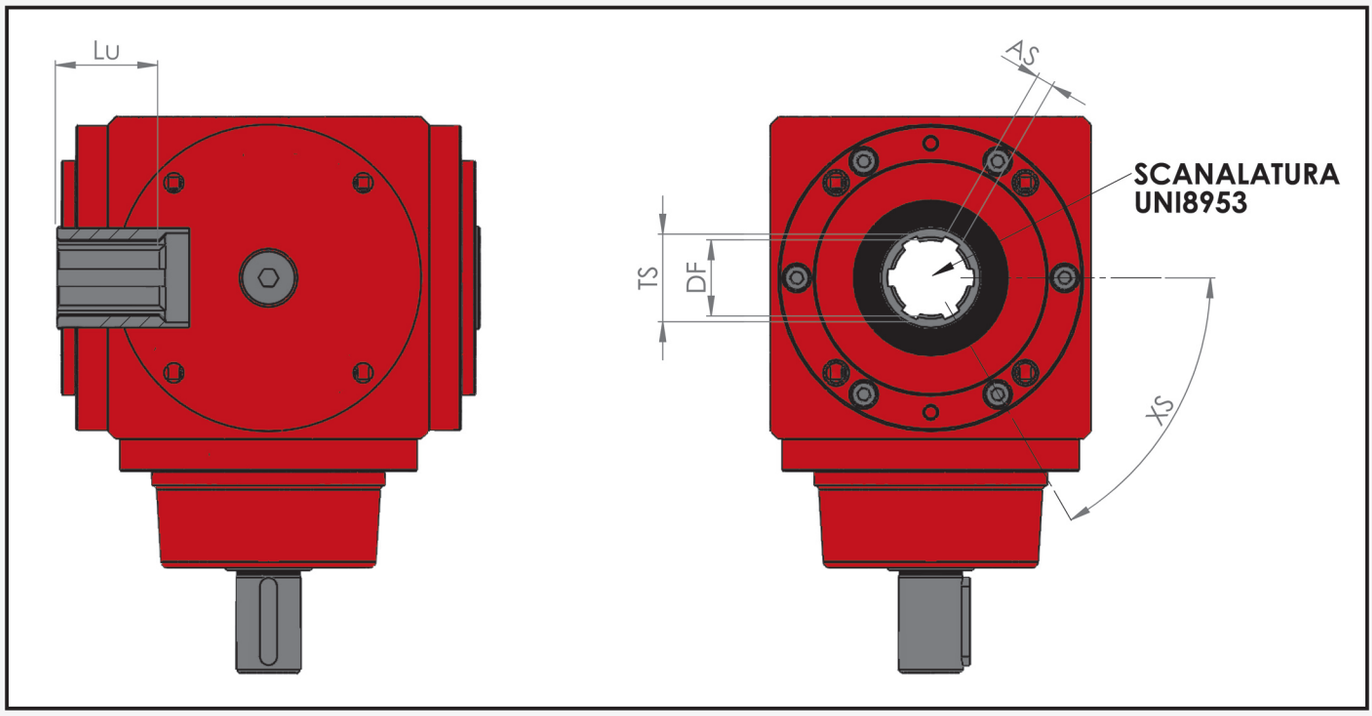

GENERAL MEASUREMENTS							
SIZE	DF	TS	AS	Lu	XS	Number of teeth	Groove
2005	14	20	4	25	60	6	6x16x20
2010	22	30	6	37	60	6	6x26x30
2020	32	40	6		45	8	8x32x38
2040	42	50	8		45	8	8x42x48
2080	55	68	12		45	8	8x62x68
2160	65	78	12		36	10	10x72x78

OPTIONAL INLET FLANGE AND OUTLET FLANGE

The optional Inlet flange (FE code) and Outlet flange (FU code) mount a flange similar to the PAM on the inlet or outlet to be fixed to particular customer structures or to be fixed to motors with hollow shafts. They have different dimensions to the PAM motor coupling setup and they must be in the product description as an optional extra when ordering them.

CODING EXAMPLE:

RA2010 - N - 2 - XYW - 03 - J - FE

In this case the gearbox has an optional inlet flange.
Attention: the inlet flange option cannot be ordered if the PAM setup is present or if an outlet flange option is present.

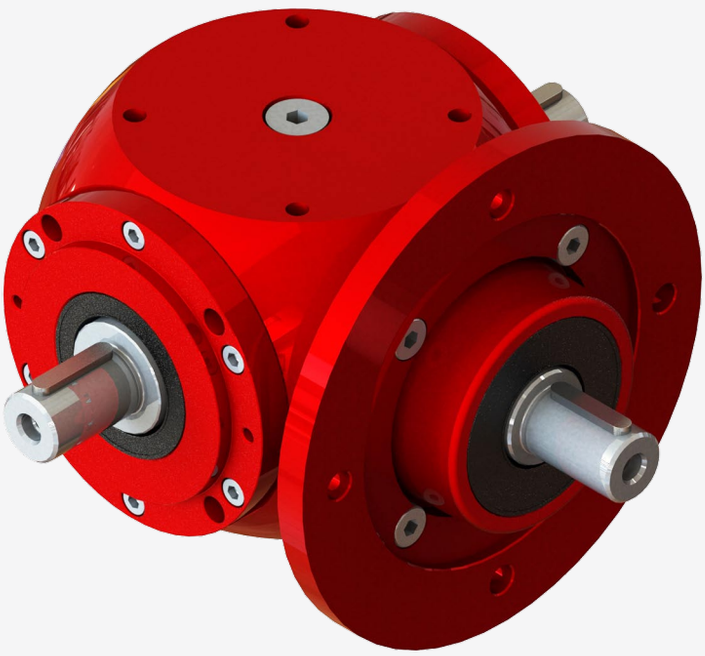

Coupling flange (inlet side)
FE

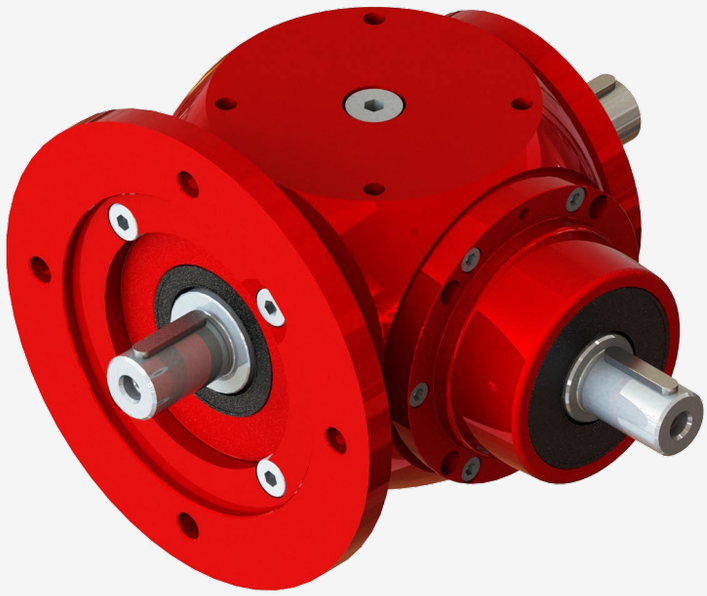

Coupling flange (outlet side)
FU

Coupling flange (inlet side) FE

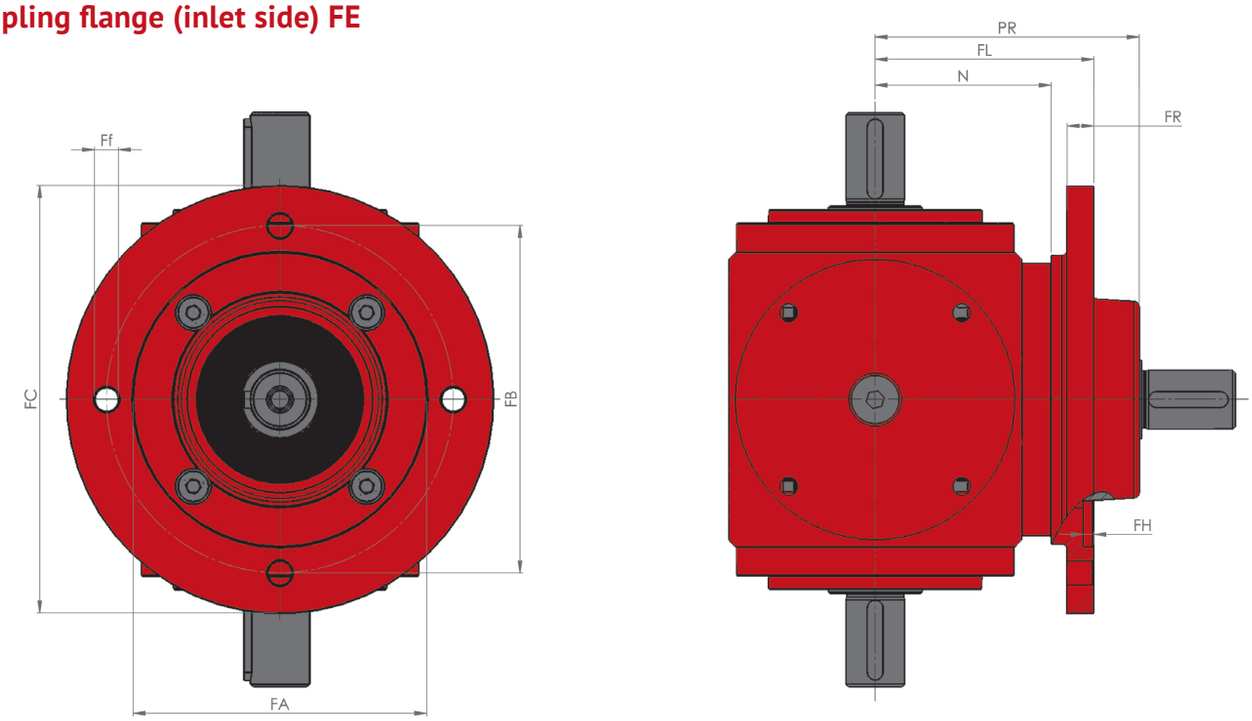

Coupling flange (outlet side) FU

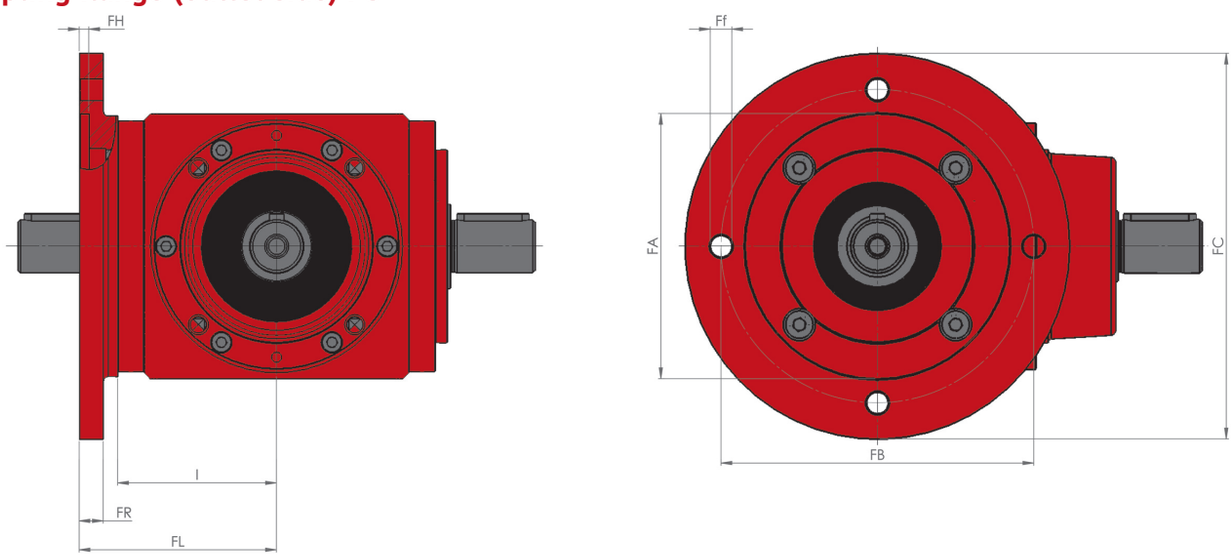

GENERAL MEASUREMENTS									
SIZE	FA	FB	FC	Ff	FR	FL	FH	I	N
2005	80	100	120	7	10	61	3	48	48
2010	110	130	160	9	10	82	4	66	66
2020	130	165	200	11	10	103	4	85	85
2040	180	215	250	13	12	125	5	103	103
2080	230	265	300	13	13	150	5	125	125
2160	250	300	350	17	15	196	6	156	156
2320	300	350	400	M16	25	237	7	197	197
2640	450	500	550	M18	30	320	8	240	240

OPTIONALS

Marzorati makes it possible to combine various optional extras with standard products, in order to solve particular needs. To add an optional extra to your order, simply add the corresponding code in the product code.

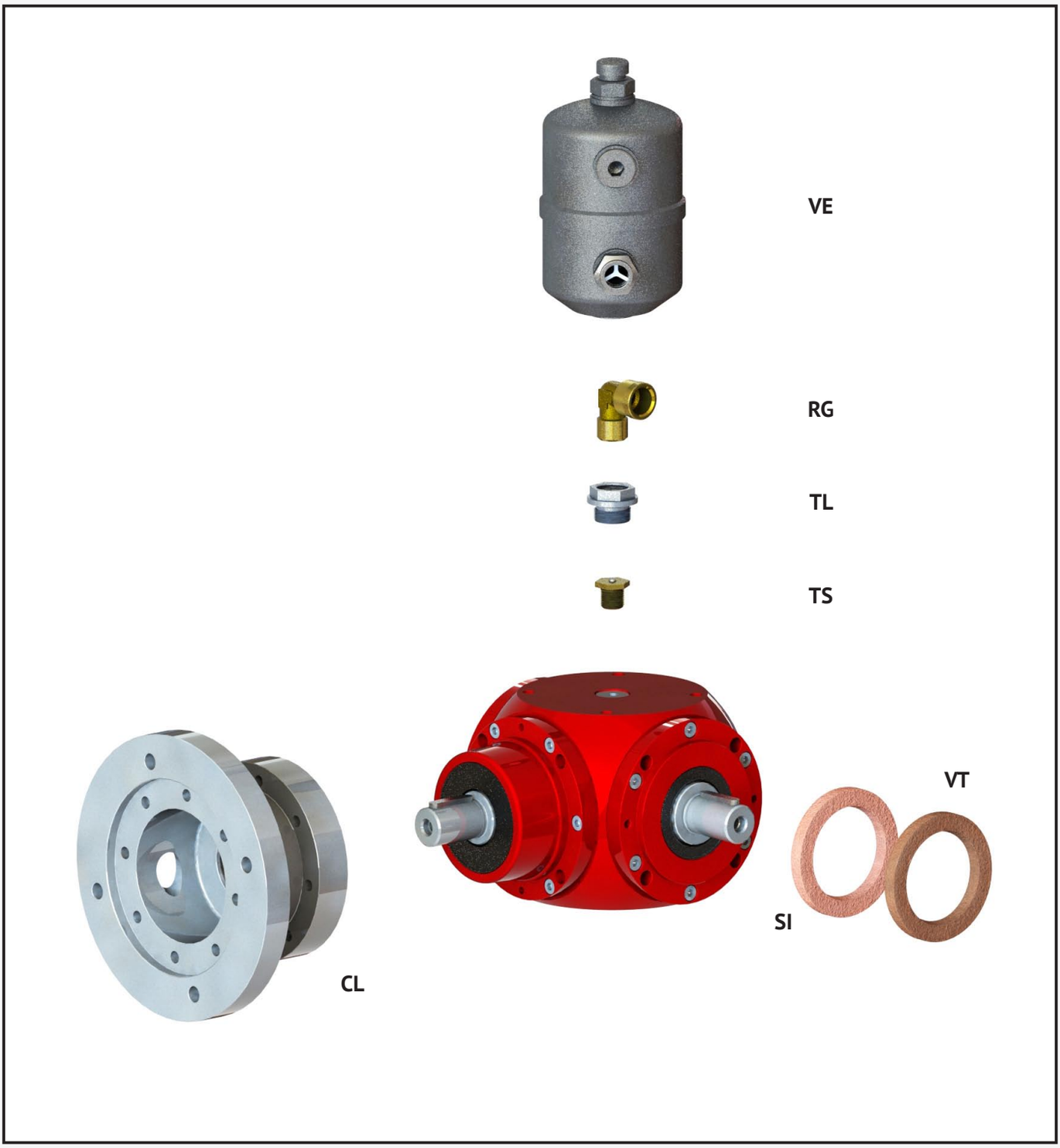

OPTIONAL

• OPTIONAL SEALS

Marzorati gearboxes are equipped with standard NBR nitrile rubber seals for rotating shafts. However, for some particular conditions this material may not be suitable for the application. The following optional seals are available:

- **VT**: FPM VITON fluorinated rubber seals, useful for work cycles with high temperatures
- **SI**: SIL/MVQ silicone rubber seals, useful for work cycles with highly variable temperatures in a range between -70°C and 200°C

• LUBRICANTS

The internal components of NRA gearboxes are splash lubricated in a closed casing using oil with additive synthetic bases, so as to obtain excellent lubrication and a very high viscosity index. It may be necessary to use a different lubricant for specific applications:

- **OA**: NSF H1 approved food-grade oil, useful for applications in the food sector, or in any case for applications in machines with particular health and hygiene standards.
- **GF**: Semi-fluid grease, useful for slower rotation speeds in particular working conditions.

• CAPS AND VESSELS

Marzorati gearboxes are fitted as standard with caps that let you refill and drain lubricant from the gearbox. The following optional extras are available:

- **TL**: Level cap, i.e. a cap equipped with a glass window with reference marks, useful for visually assessing the oil level in the gearbox
- **TS**: Vent cap, i.e. a cap equipped with a valve duct that allows venting in the event of an increase in internal pressure
- **VE**: Expansion vessel that allows the oil to expand in the event of a sharp temperature/pressure increase and therefore avoid any leakage
- **RG**: Elbow fitting, i.e. an elbow duct that facilitates the connection of grease fittings, caps, spouts, etc.

• CONNECTIONS

Couplings can be useful to connect the gearbox shafts to your application. The following optional extras are available:

- **CL**: Locking set, a device that allows the connection between the shafts by means of transmission by friction, excluding the play of the key. It can be made for both input shaft and output shaft as well as for direct connection to the motor

Furthermore, to solve particular connection needs, additional products are available such as a range of extensions and couplings. See the dedicated catalogues for more information.

SUMMARY OF CODES

N RANGE

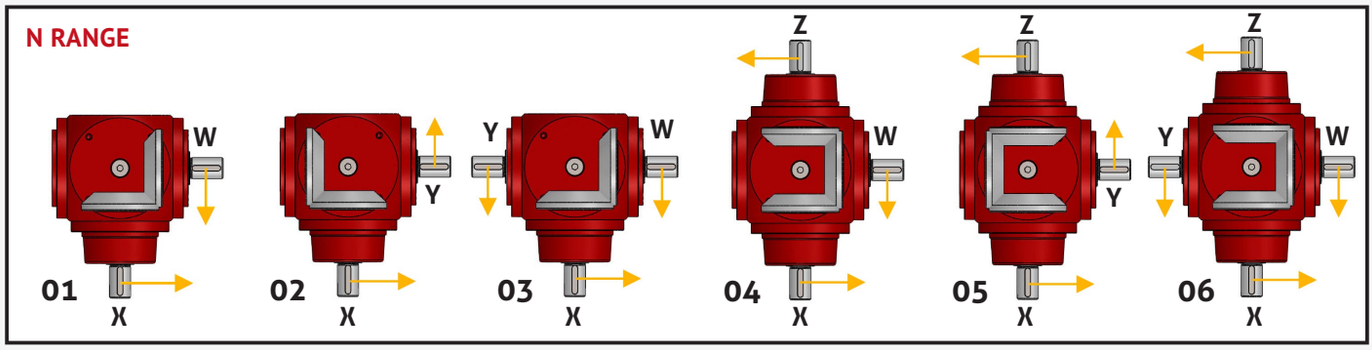

XW-01 | XY-02 | XYW-03 | XZW-04 | XZY-05 | XYZW-06

P RANGE

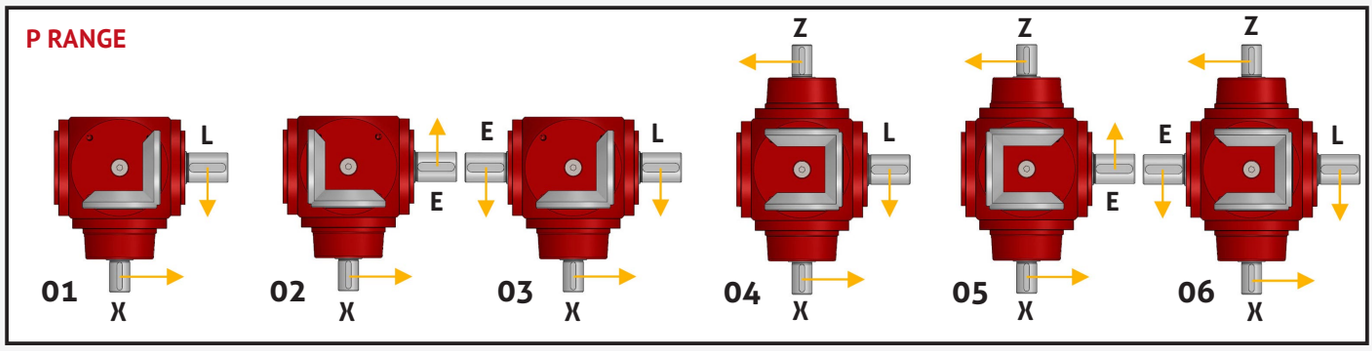

XL-01 | XE-02 | XEL-03 | XZL-04 | XZE-05 | XEZL-06

C RANGE

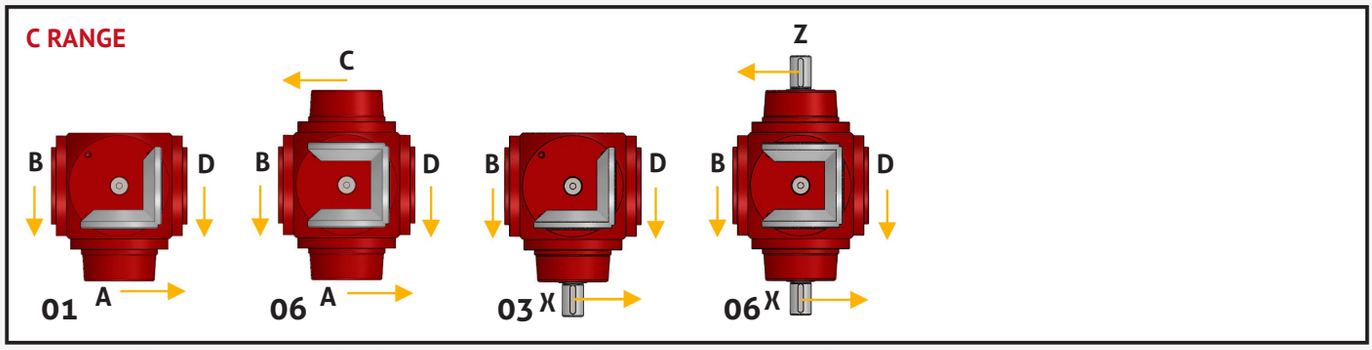

ABD-03 | ABCD-06 | XBD-03 | XBZD-06

C RANGE

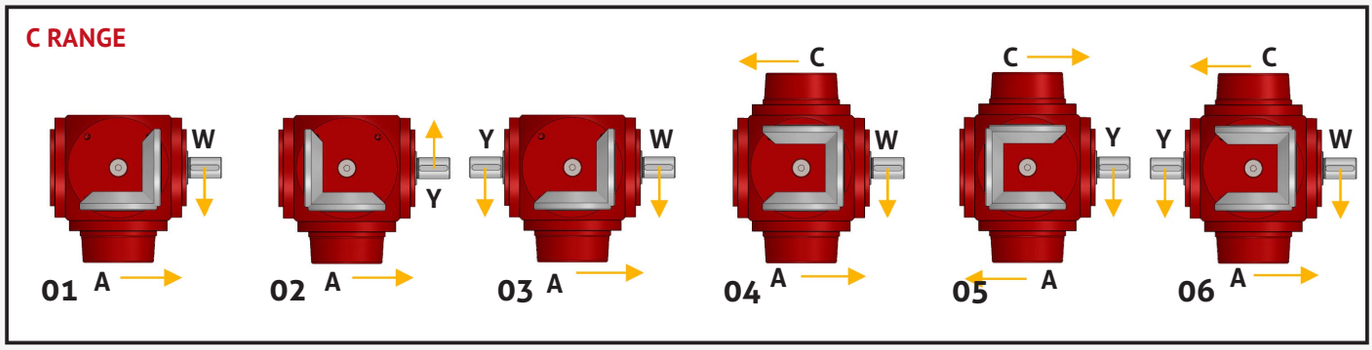

AW-01 | AY-02 | AYW-03 | ACW-04 | ACY-05 | AYCW-06

SUMMARY OF CODES

C RANGE

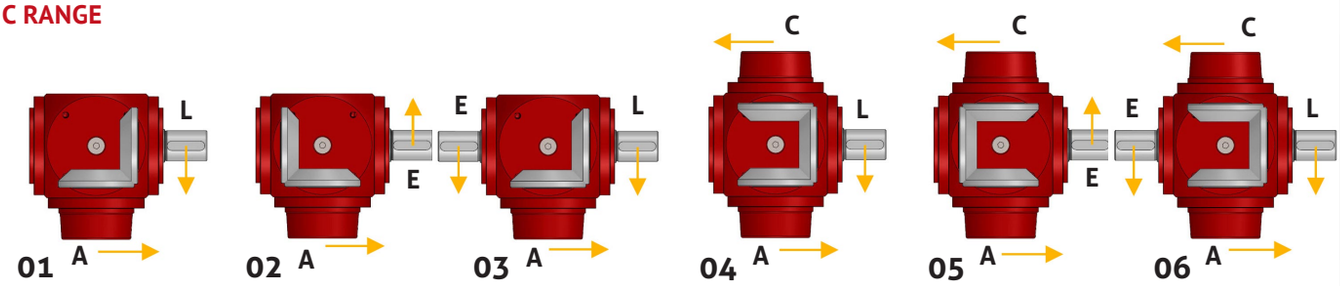

AL-01 | AE-02 | AEL-03 | ACL-04 | ACE-05 | AECL-06

V RANGE

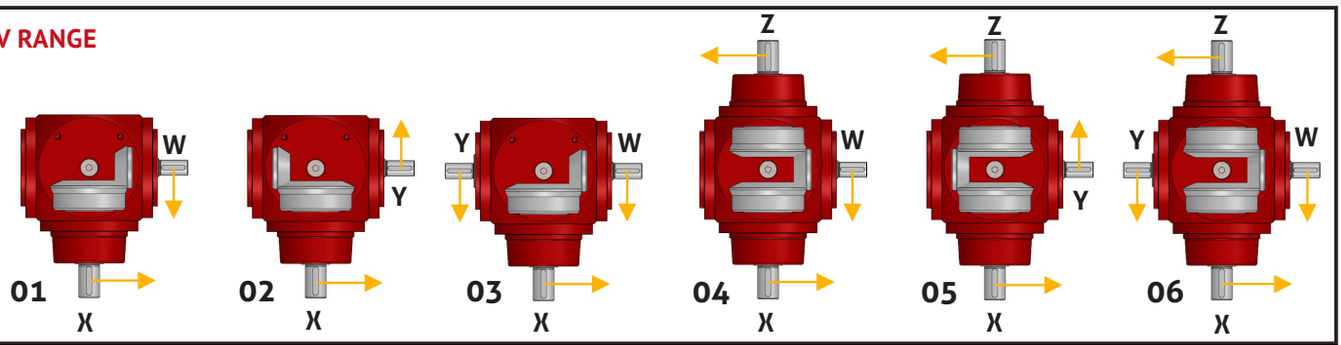

XW-01 | XY-02 | XYW-03 | XZW-04 | XZY-05 | XYZW-06

V RANGE

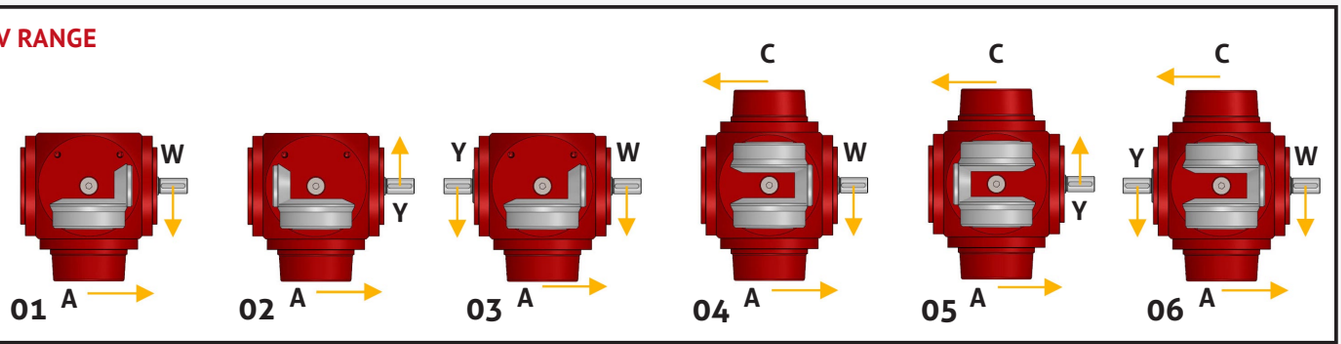

AW-01 | AY-02 | AYW-03 | ACW-04 | ACY-05 | AYCW-06

D RANGE

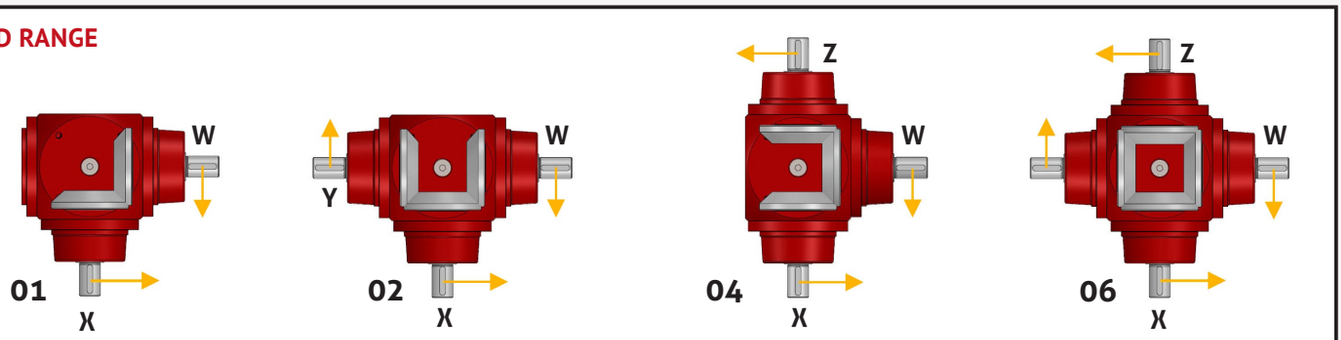

XW-01 | XYW-02 | XW-04 | XYW-06

SUMMARY OF CODES

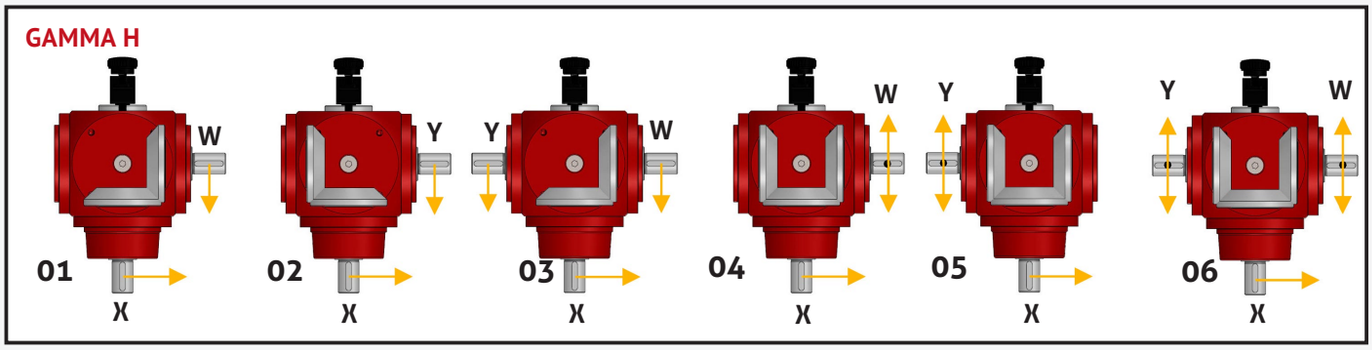

XW-01 XY-02 XYW-03 XW-04 XY-05 XYW-06

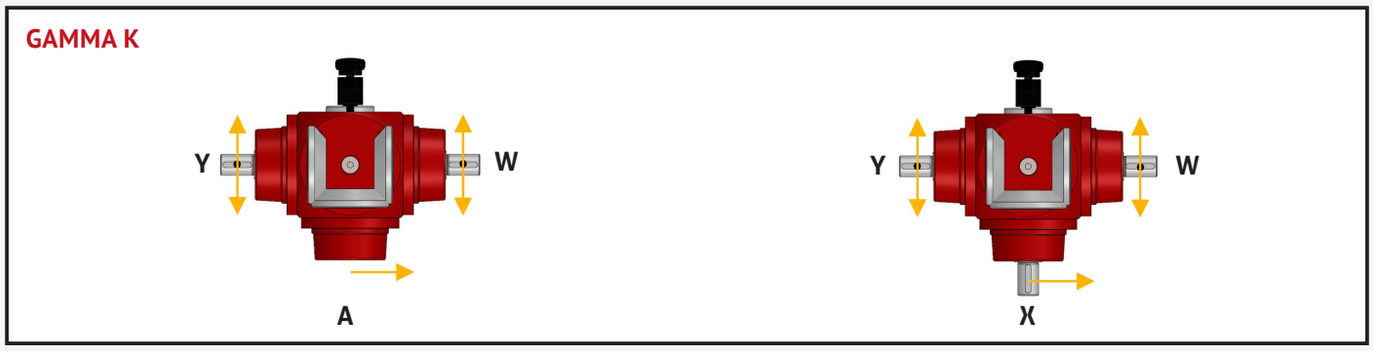

AYW-01 XYW-02

APPLICATION EXAMPLES

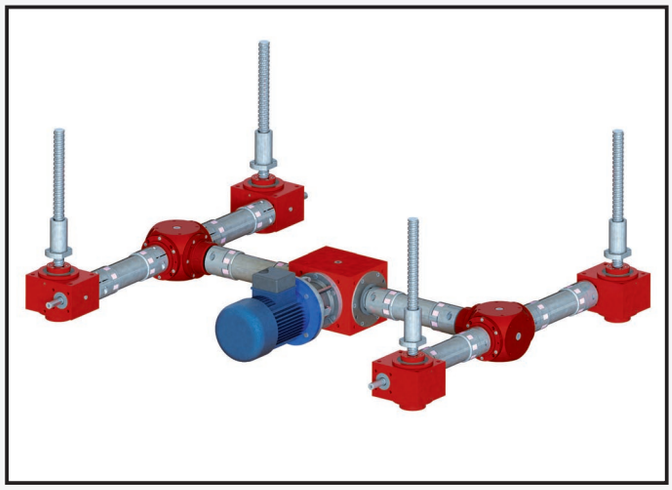

Lifting system

MARZORATI products used:
- Three-phase Asynchronous Motor MEC80B5
- Bevel gearbox NRA150-N-2.5-AYW-03-PAM80B5
- Bevel gearbox 2x RA2010-N-2-XYW-03
- Translating jack 4x SJM306S-R-V-3-180-ST-25x10
- Extension 6x ZE2-150-A length 200mm

Handling system with link chain

MARZORATI products used:
- Three-phase Asynchronous Motor MEC80B5
- Bevel gearbox RA2010-N-2-AYW-03- PAM80B5-G
- Bevel gearbox RA2010-K-1-XYW-02-R
- Extension EAZ30 length 150mm

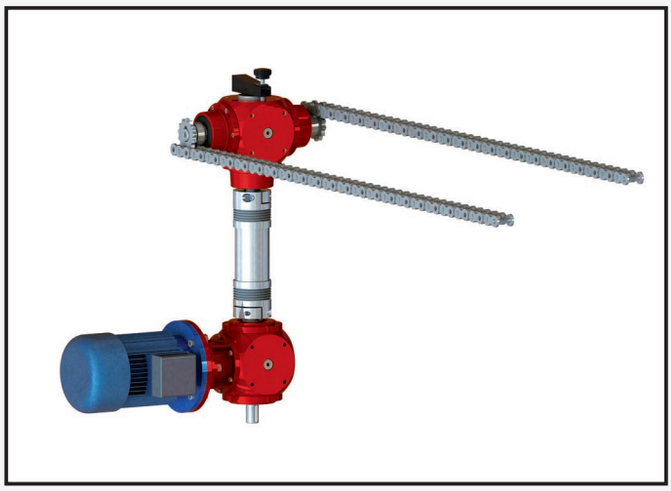

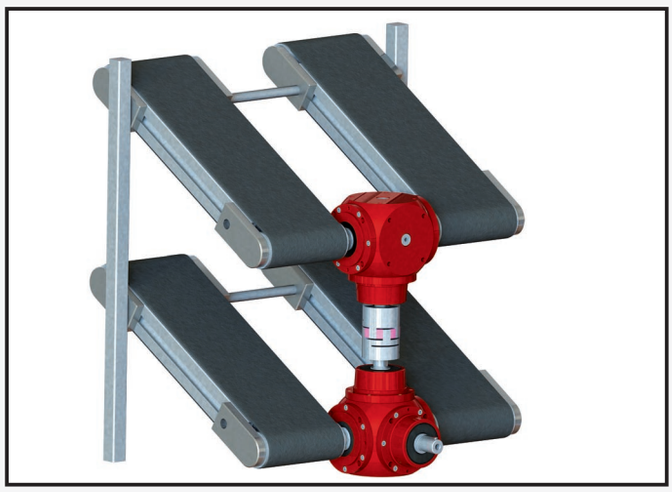

Lines with conveyor belts

MARZORATI products used:
- Bevel gearbox RA2040-X-2-XYWZ-03
- Bevel gearbox RA2040-N-3-XYW-03-R
- joint KE2-300-A-42CC/42CC

We're Here
To Help You

Marzorati

sistemi di trasmissione srl

Via A. De Gasperi, 89
20017 Rho (MI)
ITALY

Tel +39 02.36.76.39.30

www.marzorati.it

Info:
info@marzorati.it
Sales:
ufficiovendite@marzorati.it
Export:
export@marzorati.it
Technical:
ufftecnico@marzorati.it